Gas Analysis

Sample gas probes

GAS 222.20

Installation and Operation Instructions

Original instructions

BE460040
12/2023

Bühler Technologies GmbH, Harkortstr. 29, D-40880 Ratingen
Tel. +49 (0) 21 02 / 49 89-0, Fax: +49 (0) 21 02 / 49 89-20
E-Mail: analyse@buehler-technologies.com
Internet: www.buehler-technologies.com

Bühler Technologies GmbH, Harkortstr. 29, D-40880 Ratingen
Tel. +49 (0) 21 02 / 49 89-0, Fax: +49 (0) 21 02 / 49 89-20
Internet: www.buehler-technologies.com
E-Mail: analyse@buehler-technologies.com

Read this instruction carefully prior to installation and/or use. Pay attention particularly to all advises and safety instructions to prevent injuries. Bühler Technologies can not be held responsible for misusing the product or unreliable function due to unauthorised modifications.

Document information
Document No.....BE460040
Version.....12/2023

Table of Contents

1 Introduction

1.1 Intended Use

The sample gas probe is intended for installation into gas analysis systems in commercial applications.

Sample gas probes are among the main components in a gas conditioning system.

- Therefore also note the related drawing in the data sheet in the appendix.
- Before installing the device, verify the listed technical data meet the application parameters.
- Further verify all contents are complete.

Please refer to the type plate to identify your model. In addition to the job number/ID number, this also contains the article number and model designation.

Please note the specific values of the device when connecting, and the correct versions when ordering spare parts.

1.2 Type Plate

Example:

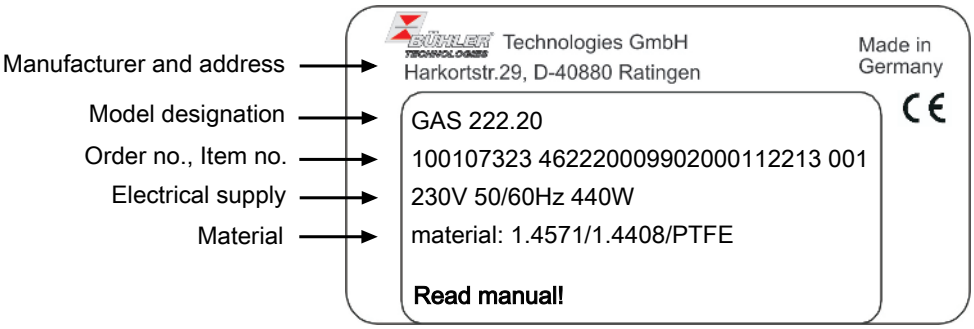

1.3 Scope of Delivery

- 1 x Sample gas probe
- 1 x Flange gasket and screws
- Product documentation
- Connection and mounting accessories (only optional)

1.4 Ordering instructions

The item number is a code for the configuration of your unit. Please use the following model key:

4622220	0	9	9	0	X	X	X	X	9	9	9	9	9	9	Product Characteristics
															Flange
															DIN DN65 PN6
															Power supply sample probe
					1										115 V
					2										230 V
															Calibrating gas connection
						0									no calibrating gas connection
						1									6 mm
						2									6 mm with check valve
						3									1/4"
						4									1/4" with check valve
															Connection heated extension
							0								No
							1								Yes
															Built-in temperature controller for heated extension
								0							No
								1							Yes

1.5 Product Description

Probe	Description
GAS 222.20	Probe with downstream filter, electronic control
Accessories	Please refer to the data sheet at the end of this manual for accessories for this probe

2 Safety instructions

2.1 Important advice

Operation of the device is only permitted if:

- the product is used under the conditions described in the installation- and operation instruction, the intended application according to the type plate and the intended use. In case of unauthorized modifications done by the user Bühler Technologies GmbH can not be held responsible for any damage,
- when complying with the specifications and markings on the nameplates.
- the performance limits given in the datasheets and in the installation- and operation instruction are obeyed,
- monitoring devices and safety devices are installed properly,
- service and repair is carried out by Bühler Technologies GmbH,
- only original spare parts are used.

This manual is part of the equipment. The manufacturer keeps the right to modify specifications without advanced notice. Keep this manual for later use.

Signal words for warnings

DANGER	Signal word for an imminent danger with high risk, resulting in severe injuries or death if not avoided.
WARNING	Signal word for a hazardous situation with medium risk, possibly resulting in severe injuries or death if not avoided.
CAUTION	Signal word for a hazardous situation with low risk, resulting in damaged to the device or the property or minor or medium injuries if not avoided.
NOTICE	Signal word for important information to the product.

Warning signs

These instructions include the following warnings:

	General warning sign		General mandatory sign
	Voltage warning		Unplug from mains
	Warning not to inhale toxic gases		Wear respiratory equipment
	Warning of corrosive substances		Wear a safety mask
	Warning of explosion hazard		Wear gloves
	Warning of hot surfaces		

2.2 General hazard warnings

The equipment must be installed by a professional familiar with the safety requirements and risks.

Be sure to observe the safety regulations and generally applicable rules of technology relevant for the installation site. Prevent malfunctions and avoid personal injuries and property damage.

The operator of the system must ensure:

- Safety notices and operating instructions are available and observed,
- The respective national accident prevention regulations are observed,
- The permissible data and operational conditions are maintained,
- Safety guards are used and mandatory maintenance is performed,
- Legal regulations are observed during disposal,
- compliance with national installation regulations.

Maintenance, Repair

Please note during maintenance and repairs:

- Repairs to the unit must be performed by Bühler authorised personnel.
- Only perform conversion-, maintenance or installation work described in these operating and installation instructions.
- Always use genuine spare parts.
- Do not install damaged or defective spare part. If necessary, visually inspect prior to installation to determine any obvious damage to the spare parts.

Always observe the applicable safety and operating regulations in the respective country of use when performing any type of maintenance.

DANGER

Electrical voltage

Electrocution hazard.

a) Disconnect the device from power supply.

b) Make sure that the equipment cannot be reconnected to mains unintentionally.

c) The device must be opened by trained staff only.

d) Regard correct mains voltage.

DANGER

Toxic, corrosive gases

The measuring gas led through the equipment can be hazardous when breathing or touching it.

a) Check tightness of the measuring system before putting it into operation.

b) Take care that harmful gases are exhausted to a save place.

c) Before maintenance turn off the gas supply and make sure that it cannot be turned on unintentionally.

d) Protect yourself during maintenance against toxic / corrosive gases. Use suitable protective equipment.

DANGER

Potentially explosive atmosphere

Explosion hazard if used in hazardous areas.
The device is not suitable for operation in hazardous areas with potentially explosive atmospheres.
Do not expose the device to combustible or explosive gas mixtures.

3 Transport and storage

Only transport the product inside the original packaging or a suitable alternative.

The equipment must be protected from moisture and heat when not in use. They must be stored in a covered, dry and dust-free room at a temperature between -20 °C to 50 °C (-4 °F to 122 °F).

4 Installation and connection

4.1 Installation site requirements

Sample gas probes are intended for flange mounting.

- Installation site and installation position are determined based on requirements specific to the application.
- If necessary, the connection piece should be slightly tilted toward the centre of the channel.
- The installation site should be protected from the weather.
- In addition, adequate and safe access for installation and future maintenance work should be provided. Particularly follow the uninstalled size of the probe tube!

If the probe is transported to the installation site in pieces, it will first need to be assembled.

4.2 Installing the sampling tube (optional)

The sampling tube, if necessary with the fitting extension, must be screwed in. The probe is then attached to the mating flange using the included seal and nuts.

4.3 Installing the downstream filter (optional)

NOTICE

The downstream filter and the O-ring for the handle must be inserted prior to first start-up.
Operating without downstream filter prohibited!

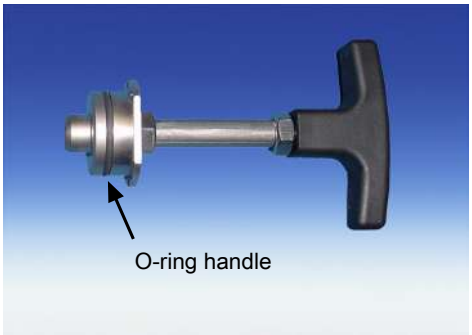

Attach an O-ring suitable for the expected ambient temperature to the handle.

Attach the downstream filter to the handle. Then carefully insert the handle with filter in the gas probe and turn 90° to secure.

Verify the handle is seated correctly. When seated correctly it locks onto the filter housing.

4.4 Insulation

On heated probes completely insulate any exposed flange areas and, if applicable, the connection piece to absolutely prevent thermal bridges. The insulating material must meet the application requirements and be weatherproof.

4.5 Connecting the Gas Line

The sample gas line must be carefully and properly connected using a suitable fitting.

This table provides an overview of the sample gas probe connections:

	Probe GAS 222	Reservoir PAV01	Ball valve pneumatic drive	Control valve 3/2-way solenoid valve
Connecting flange [1]	DN65/PN6/ DN3“-150 [2]			
Sample gas inlet	G3/4			
Sample gas outlet	NPT 1/4			
Blowback connection	G3/8			
Test gas connection [1]	Tube Ø6 mm Tube Ø1/4 [2]			
Filling port		NPT 1/4		
Condensate		G1/2		
Bypass		NPT 1/4		
Control air			G1/8	G1/4 NPT 1/4

Tab. 1: Gas Probe Connections (Varies by Model)

[1] Varies by version.

[2] Only GAS 222.xx ANSI and GAS 222.xx AMEX

WARNING

Gas emanation

Sample gas can be harmful to the health!
Check the lines for leaks.

4.5.1 Connecting the Gas Line

Please note the following items when connecting the sample gas line (NPT 1/4") on heated probes to prevent thermal bridges:

- Choose the shortest possible screw connection.
- Shorten the connection pipe for the sample gas line as much as possible. To do so, remove the insulation around the sample gas line. This is done by loosening the fixing bolts.

CAUTION

Fragile

The insulation is fragile. Handle with care, do not drop.

After connecting the sample gas line it must be braced and secured with the clamp.

Long sample gas lines may require additional support clamps along the way to the analysis system! Once all lines have been connected and checked for leaks, carefully reinstall and secure the insulation.

WARNING

Gas emanation

Sample gas can be harmful to the health!
Check the lines for leaks.

4.5.2 Connecting the calibrating gas line (optional)

Connecting the calibrating gas line requires a Ø6 mm or Ø1/4” pipe fitting.

If the calibrating gas connection was ordered with check valve, a Ø6 mm or Ø1/4” pipe can be connected directly to the check valve.

4.6 Electrical connections

WARNING **Hazardous electrical voltage**

The device must be installed by trained staff only.

CAUTION **Wrong mains voltage**

Wrong mains voltage may damage the device.
Regard the correct mains voltage as given on the type plate.

Electric strength test

The necessary tests of all assemblies required to be tested were carried out at the factory (test voltage 1 kV or 1.5 kV depending on component).

To check the electric strength again yourself, only do so on the respective individual components.

– Now perform the electric strength test against earth.

4.6.1 Connection via Terminal Strip

The probe has regulated, adjustable heating. The supply voltage is 115 V AC, 50/60Hz or 230 V AC, 50/60 Hz (see type plate).

The device is already wired to the controller.

Inside the controller housing is a terminal block for connecting the mains supply and the alarm output. The connection to the included terminal blocks is shown in the attached connection diagram. For this purpose the plugs can be removed from their sockets and reinserted once wired. The pin assignment is also printed onto the board.

If the heat dissipation is very high near the probe due to the application, the customer must install a shield to protect the probe and regulator.

4.6.2 Heated Extension (Optional)

The unit can optionally be ordered with heated extension. Heated via regulated heating tape with Pt100, preventing falling below the sample gas dew point at the sample point. The unit cannot be retrofit with a heated extension.

The connection cable for the heated extension (mains connection 115 or 230 V AC) must be connected per the enclosed connection diagram.

5 Operation and Control

NOTICE

The device must not be operated beyond its specifications.

5.1 Basic function of the probe controller

5.1.1 Regulator Functions

After switching on the combination the probe is heated up. The display with the current temperature will light up on the controller. As long as the set operating range is has not yet been reached, the display will flash and the status contact is in Alarm position. Once the working range has been reached, the status contact switches and the display is steady.

The target temperature, the working range of the probe and the temperature unit (°C/°F) are set using the three control buttons on the controller. This is described in chapter “Operation and use”.

The factory settings are: Unit: °C; target temperature: 180 °C; working range: ±10 °C

5.1.2 Advanced Functions with Built-In Regulator for Heated Extension (Optional)

The display will alternating between **"Prob"**– **adapter temperature** – **"AdOn"**– **extension temperature**.

5.2 Use of menu functions

Overview of the operational principal:

Use this short description if you have experience with the device.

Operation is carried out by only the keys with the following functions:

Key	Function
↵	– Switch from measurement display to main menu – Selection of the display menu item – Accepting the changed value or selection
↑	– Switch to the upper menu item – Increase of the value of switching the selection – Temporary display of the alternative measurement display (if option is installed)
↓	– Switch to lower menu item – Decrease of the value of switching the selection – Temporary display of the alternative measurement display (if option is installed)

5.2.1 Menu Navigation Overview

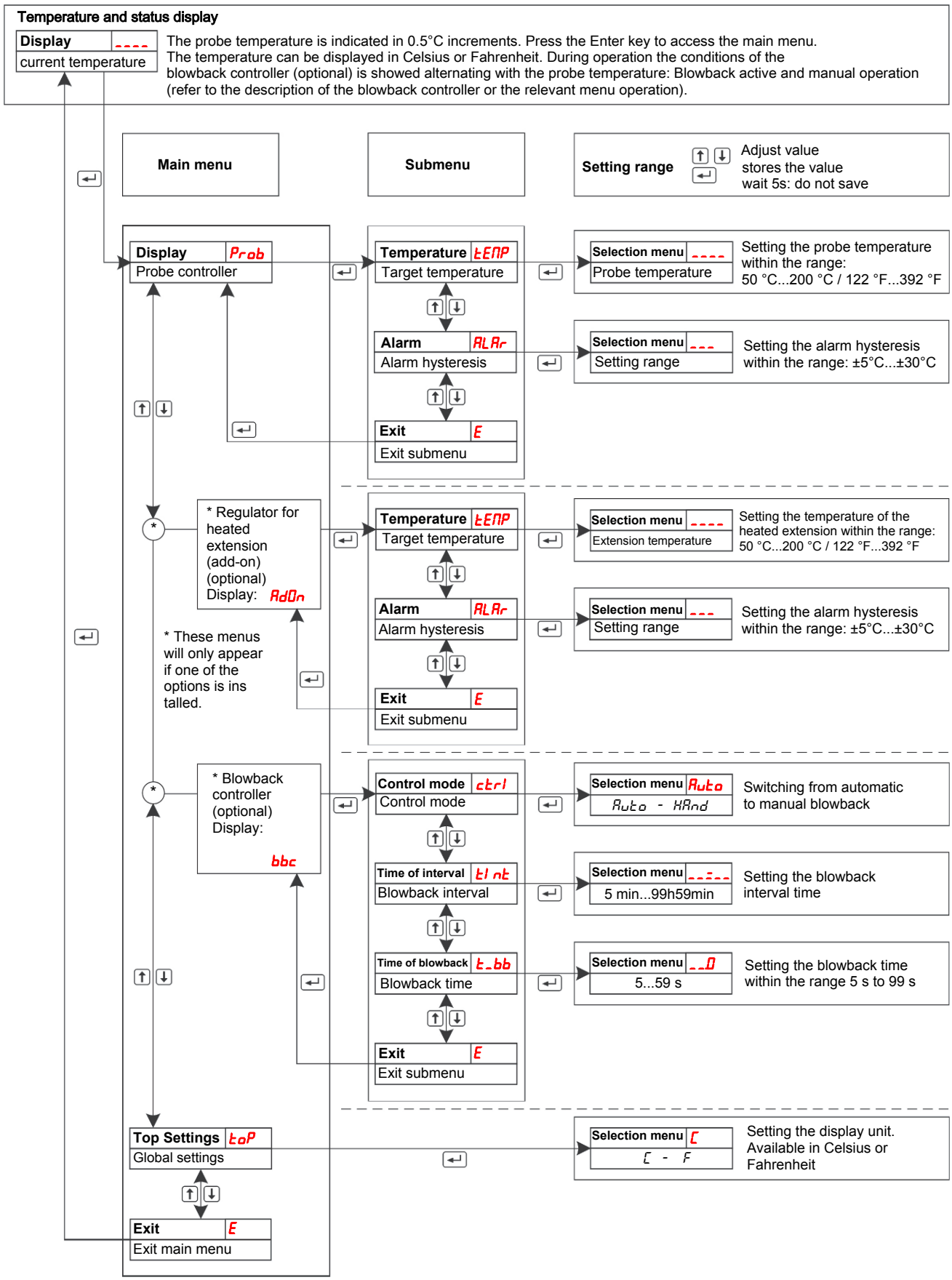

5.2.2 Detailed description of the operational principle

The detailed description will guide you through the menu step by step.

Connect the unit to the power supply and wait for the startup procedure to complete. At first the software version implemented on the unit will be displayed for a brief period. The unit will then switch directly into measured value display.

↵ Pressing the button will take you from display mode to the main menu. (The control will continue running whilst in menu mode.)

↑↓ Use these buttons to navigate the main menu.

↵ After confirming a main menu item the associated submenu will open

Here you can configure operating parameters:

↑↓ Cycle through the submenu to configure the parameters,

↵ then confirm the menu item to be changed.

↑↓ You can now set values within specific limits.

↵ After confirming the value the system will save it. This will automatically return you to the submenu.

If no button is pushed for approx. 5 s, the unit will automatically return to the submenu. Changes to values will not be saved.

The same applies to the sub- and main menu. The system will automatically return to display mode without saving the (last) value changed. Parameters which were previously changed and saved will be retained and not reset.

NOTICE! After saving values with the Enter key they will be applied to the control.

E To exit the main or submenu, select menu item E (Exit).

5.3 Description of menu functions

5.3.1 Main Menu

Regulator (probe)

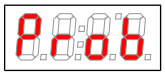

From here you will be able to access all relevant temperature controller settings. The related submenu allows you to select the target temperature and alarm thresholds.

Regulator for heated extension (add-on; only appears if option is installed)

From here you can access all relevant settings for the temperature regulator of the heated extension. The related submenu allows you to select the target temperature and alarm thresholds.

Blow back control Only appears if option is installed)

From here you will be able to access all relevant settings for the probe blowback controller. You can select the control mode, blowback interval and blowback time from the submenu.

Globale settings (ToP Settings)

Selection of the global temperature unit, either degree Celsius (C) or degree Fahrenheit (F).

Note: This menu item has no sub-item. The temperature unit is directly selected.

Exit main menu

Display → E

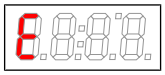

Selecting this will return you to display mode.

5.3.2 Probe Controller Submenu [Display: Prob]

Regulator -> Target temperature (Temperature)

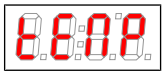	This setting is for the device temperature target value. The value can be set within a range from 50 °C (122 °F) to 200 °C (392 °F).
Note:	The default value on delivery is 180 °C (356 °F).

Controller -> Alarm range

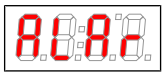	This item allows setting of the alarm range threshold for the optical alarm as well as for the alarm relay. The alarm threshold may be set in the range from ±5 °C (±9 °F) to ±30 °C (±54 °F) with respect to the nominal value.
Note:	Default value at delivery is ±10 °C (±18 °F).

Exit submenu 1

Display → Submenu → *E*

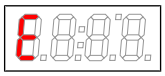	Selecting this will return you to the main menu.

5.3.3 Regulator Submenu for Heated Extension [Display: Adon] (Optional)

Regulator -> Target temperature (Temperature)

	This setting is for the device temperature target value. The value can be set within a range from 50 °C (122 °F) to 200 °C (392 °F).
Note:	The default value on delivery is 180 °C (356 °F).

Controller -> Alarm range

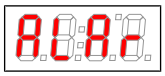	This item allows setting of the alarm range threshold for the optical alarm as well as for the alarm relay. The alarm threshold may be set in the range from ±5 °C (±9 °F) to ±30 °C (±54 °F) with respect to the nominal value.
Note:	Default value at delivery is ±10 °C (±18 °F).

Exit submenu 1

Display → Submenu → *E*

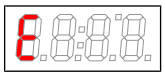	Selecting this will return you to the main menu.

6 Service

During maintenance, remember:

- The equipment must be maintained by a professional familiar with the safety requirements and risks.
- Only perform maintenance work described in these operating and installation instructions.
- Observe the respective safety regulations and operating specifications when performing any type of maintenance.
- Always use genuine spare parts.

DANGER

Electrical voltage

Electrocution hazard.

a) Disconnect the device from power supply.

b) Make sure that the equipment cannot be reconnected to mains unintentionally.

c) The device must be opened by trained staff only.

d) Regard correct mains voltage.

DANGER

The gas inside the filter, condensate and used filter elements may be caustic or corrosive.

Sample gas can be harmful.

a) Before maintenance turn off the gas supply and surge with air if necessary.

b) Exhaust sample gas to a safe place.

c) Protect yourself against toxic / corrosive gas during maintenance. Wear appropriate personal protection equipment.

CAUTION

Hot surface

Risk of burns
Depending on the operating parameters, the housing temperature may reach over 100 °C during operation.
Allow the unit to cool down before performing maintenance.

CAUTION

Excess pressure

The unit mustn't be pressurised or energised when opened.
If necessary, close the gas supply and ensure a safe pressure on the process end before opening.

6.1 Maintaining the filter element

The probes feature a particle filter which needs to be changed as it becomes dirty.

To do so, disconnect the voltage supply and if applicable close the shut-off valve to the process or switch off the process.

CAUTION! Do not damage the rear filter seat.

NOTICE

Ceramic filter elements are very brittle by nature. Handle them with care, don't let them fall.
Filter elements made out of sintered stainless steel can be cleaned in an ultrasonic bath and be used several times as long as both seals are still in proper conditions.

6.1.1 Replacing the downstream filter

- Unlock and lift up the weather hood.
- Turn the handle at the back end of the probe by 90° (handle must then be horizontal), pushing in slightly, and remove.
- Remove the dirty filter element and check the sealing surfaces.
- Before installing the new filter element, replace the seal on the handle plug (seal included with the filter element).
- Then carefully insert the handle with new filter, push in slightly and turn 90° (handle must then be vertical). Pull on the handle to verify the filter element is firmly seated.
- With the filter removed, if necessary also need clean the inside of the sampling tube by blowing it out or using a cleaning wand.

NOTICE

The weather hood can only be closed again when the handle is completely vertical. In order to do so, loosen the hood from the locking supports by lifting slightly and then fold down. Ensure that the hood lock clicks into place correctly.

6.1.2 Replacing the Outlet Filter with Micro-Fibreglass Filter Element

- Turn the handle at the rear end of the probe by 90° (handle must be horizontal), pushing in slightly, and remove.
- Unscrew the dirty filter element counter-clockwise from the thread of the handle.
- Pull both stainless steel filter seats off the filter element.
- Before installing the new filter element, replace the seal on the handle and inside the stainless steel filter seats (seals are included with the filter element).
- Then turn the handle with the new filter by 90° (handle must be vertical), pushing in slightly.
  CAUTION! Do not damage the rear filter seat.

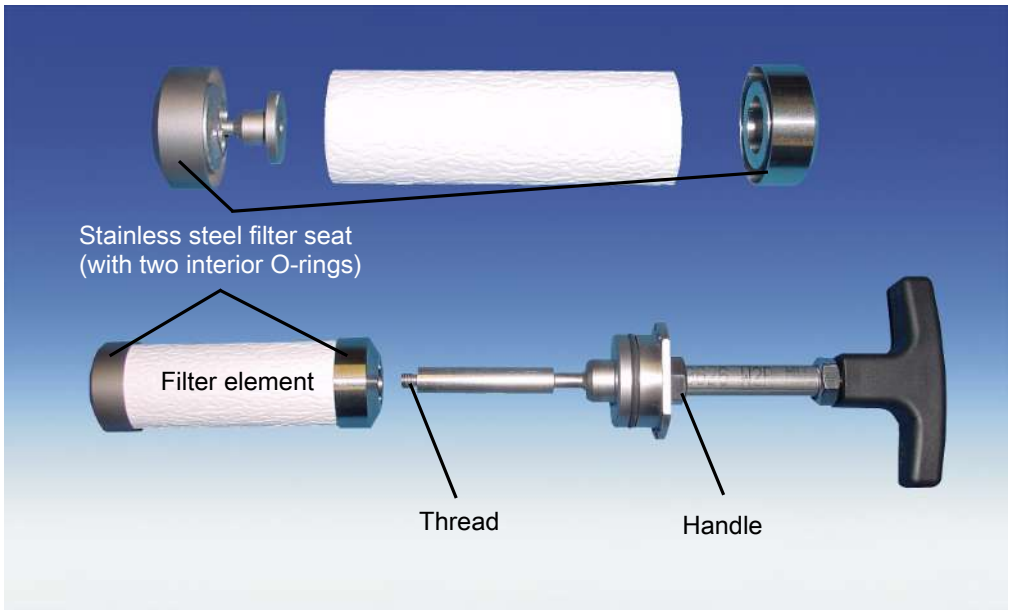

With the filter removed, you may also clean the inside of the sampling tube if necessary by blowing it out or using a cleaning wand.

7 Service and repair

This chapter contains information on troubleshooting and correction should an error occur during operation.

Repairs to the unit must be performed by Bühler authorised personnel.

Please contact our Service Department with any questions:

Tel.: +49-(0)2102-498955 or your agent

For further information about our services and customised maintenance visit http://www.buehler-technologies.com/service.

If the equipment is not functioning properly after correcting any malfunctions and switching on the power, it must be inspected by the manufacturer. Please send the equipment inside suitable packaging to:

Bühler Technologies GmbH

- Reparatur/Service -

Harkortstraße 29

40880 Ratingen

Germany

Please also attach the completed and signed RMA decontamination statement to the packaging. We will otherwise be unable to process your repair order.

You will find the form in the appendix of these instructions, or simply request it by e-mail:

service@buehler-technologies.com.

7.1 Troubleshooting

CAUTION

Risk due to defective device

Personal injury or damage to property

a) Switch off the device and disconnect it from the mains.

b) Repair the fault immediately. The device should not be turned on again before elimination of the failure.

Problem / Malfunction	Possible cause	Action
No or reduced gas flow	– Filter element clogged	– Clean or replace filter element, clean sampling tube
Temperature alarm	– Heat-up not yet completed	– Wait for heat-up to complete
	– Pt100 failure	– Send in probe for repair
	– Heater / controller failure	– Send in probe for repair
No heat output / no display	– No / incorrect voltage	– Power supply
	– Controller failure	– Send in probe for repair
Condensation forming	– Heater failure	– Send in probe for repair
	– Thermal bridges at the sampling point	– Insulate to eliminate thermal bridges
Error messages on the display		
Er01 Error 01	– Probe temperature too high, line Pt100 disconnected	– Check Pt100 connection inside the controller or send probe in for repair
Er02 Error 02	– Probe temperature too low, Pt100 short-circuit	– Send in probe for repair
Er03 Error 03	– Heated extension temperature too high, line Pt100 disconnected	– Check Pt100 connection inside the controller or send probe in for repair
Er04 Error 04	– Heated extension temperature too low, Pt100 short-circuit	– Send in probe for repair

Tab. 2: Troubleshooting

7.2 Spare Parts

Please also specify the model and serial number when ordering parts.

Upgrade and expansion parts can be found in our catalog.

Available spare parts:

Item no.	Description
9110000001	Fuse 115 V/230 V: 800 mA delayed action
9009105	Measuring outlet seal
9009079	Flange seal DN65 PN6
9009068	Flange seal FD 40 WS
46222012	O-ring kit for filter element and probe, material: Viton
46222024	O-ring kit for filter element and probe, material: Perfluoroelastomer
	Please see the accessories data sheet in the appendix for filter elements

8 Disposal

The applicable national laws must be observed when disposing of the products. Disposal must not result in a danger to health and environment.

The crossed out wheelie bin symbol on Bühler Technologies GmbH electrical and electronic products indicates special disposal notices within the European Union (EU).

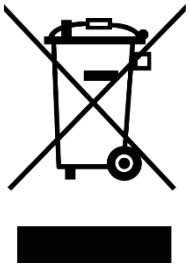

The crossed out wheelie bin symbol indicates the electric and electronic products bearing the symbol must be disposed of separate from household waste. They must be properly disposed of as waste electrical and electronic equipment.

Bühler Technologies GmbH will gladly dispose of your device bearing this mark. Please send your device to the address below for this purpose.

We are obligated by law to protect our employees from hazards posed by contaminated devices. Therefore please understand that we can only dispose of your waste equipment if the device is free from any aggressive, corrosive or other operating fluids dangerous to health or environment. **Please complete the "RMA Form and Decontamination Statement", available on our website, for every waste electrical and electronic equipment. The form must be applied to the packaging so it is visible from the outside.**

Please return waste electrical and electronic equipment to the following address:

Bühler Technologies GmbH
WEEE
Harkortstr. 29
40880 Ratingen
Germany

Please also observe data protection regulations and remember you are personally responsible for the returned waste equipment not bearing any personal data. Therefore please be sure to delete your personal data before returning your waste equipment.

9 Appendices

9.1 Technical Data

Gas Probe Technical Data	
Probe operating temperature:	max. 200 °C
Ambient temperature:	-20 to +70 °C (can be limited by optional add-ons)
Controller temperature range:	+50 to +200 °C
Low/high temperature alarm:	Alarm adjustable ±5.....30 K from setpoint, factory preset 15 K Max. switching current 1 A
Electrical data:	230 V, 2.0 A, 50/60 Hz 115 V, 3.8 A, 50/60 Hz
IP rating:	IP54
Max. operating pressure:	6 bar
Parts in contact with media:	Flange: 1.4571 Seals: Graphite/1.4404 and see filter

9.2 Flow chart

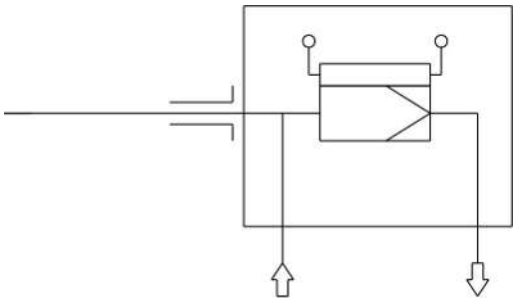

9.3 Dimensions

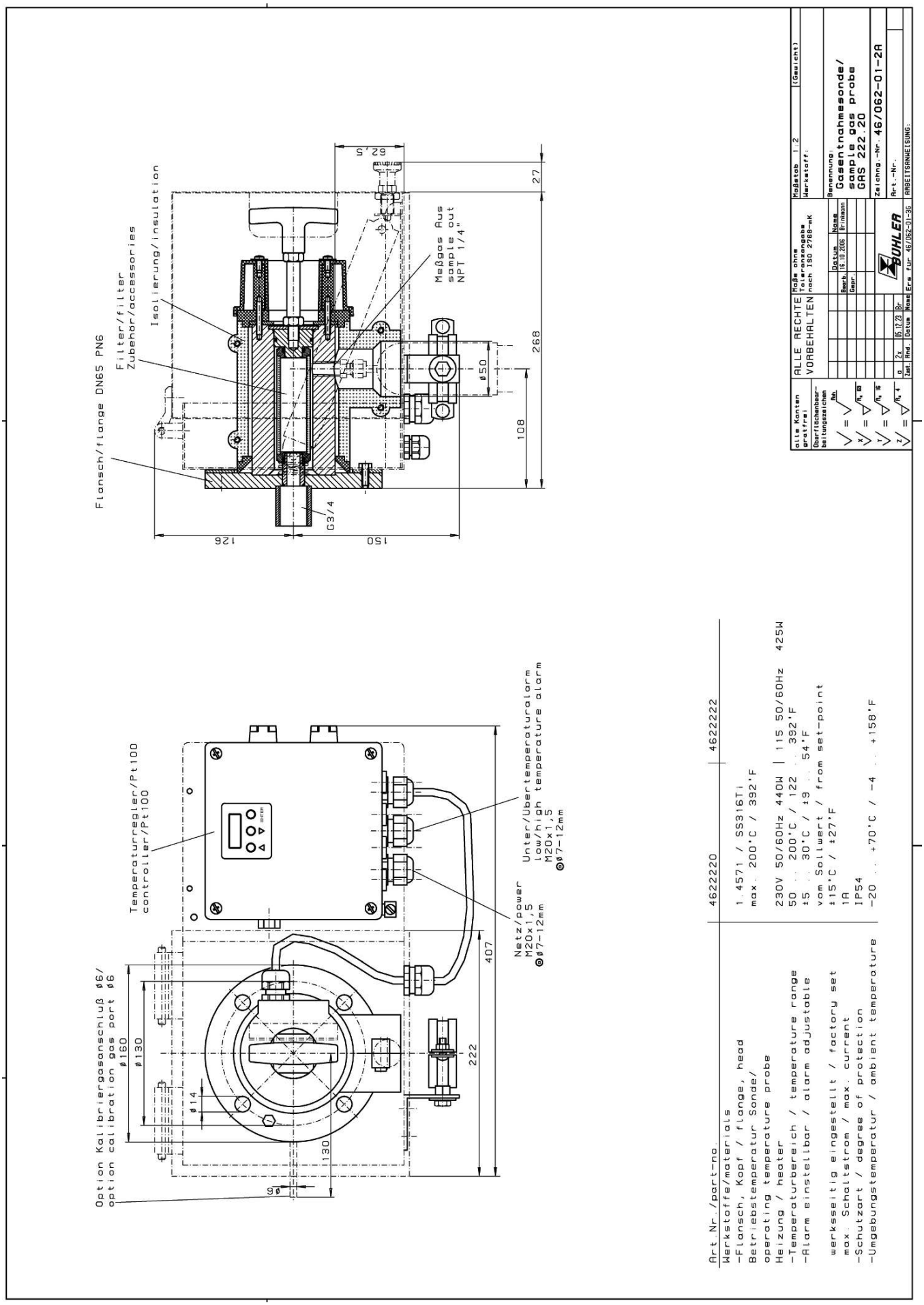

9.4 Connection Diagram

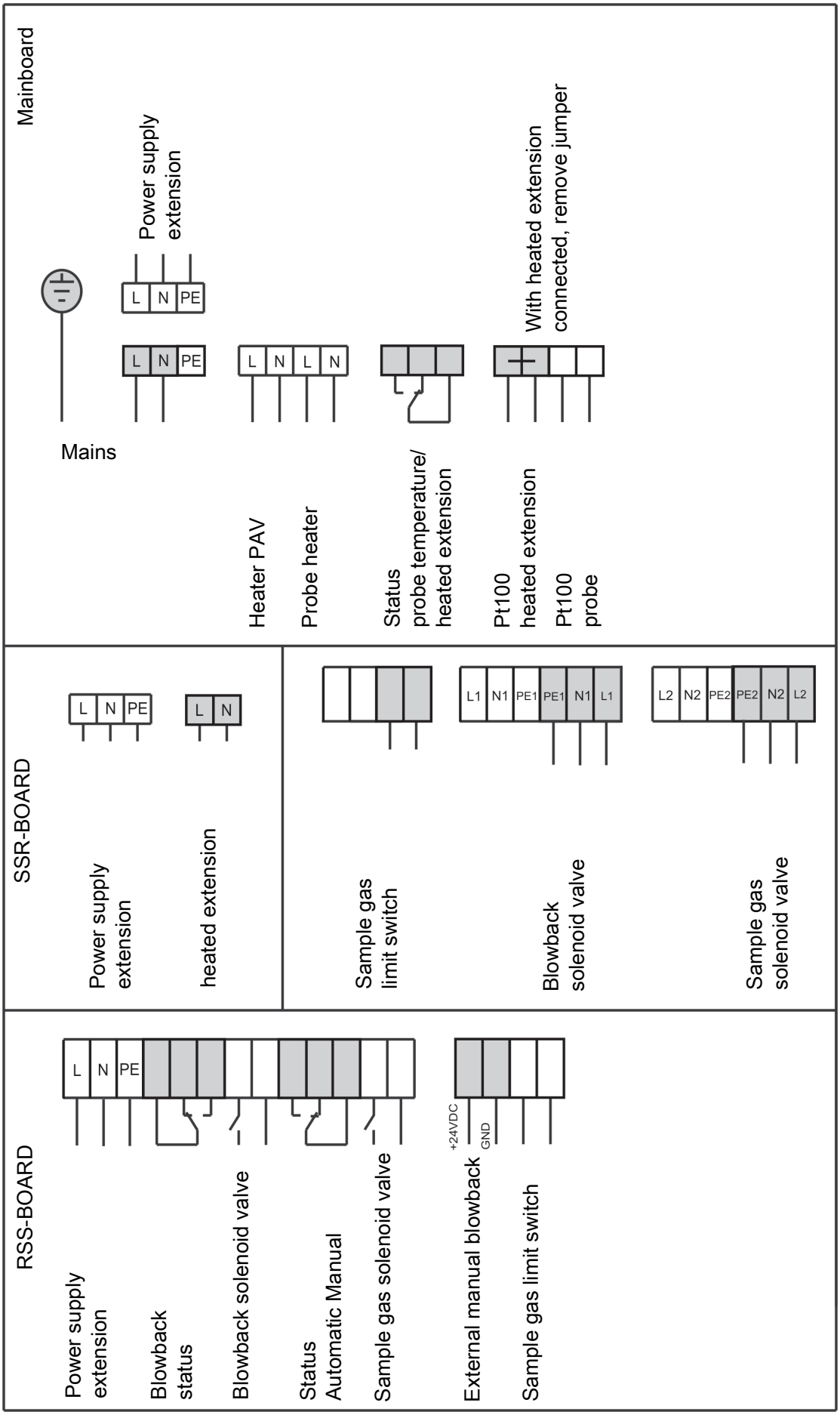

9.5 User book (Please make copies)

Maintained on	Unit no.	Operating hours	Remarks	Signature

10 Attached Documents

- Declaration of Conformity KX460012
- Accessories Data Sheet 461099
- RMA - Decontamination Statement

EU-Konformitätserklärung
EU-declaration of conformity

Hiermit erklärt Bühler Technologies GmbH, dass die nachfolgenden Produkte den wesentlichen Anforderungen der Richtlinie

Herewith declares Bühler Technologies GmbH that the following products correspond to the essential requirements of Directive

2014/35/EU
(Niederspannungsrichtlinie / *low voltage directive*)

in ihrer aktuellen Fassung entsprechen.

in its actual version.

Folgende Richtlinie wurde berücksichtigt:

The following directive was regarded:

2014/30/EU (EMV/EMC)

Produkt / products: Beheizte Messgassonden / *Heated Sample Gas Probes*
Typ / types: GAS 222.14, GAS 222.15, GAS 222.17, GAS 222.20, GAS 222.21, GAS 222.31, GAS 222.35, GAS 222.40

Die Betriebsmittel sind zur Gasentnahme aus dem Abgasstrom oder einem laufenden Prozess bestimmt.
The equipment is intended for gas sampling from flue gas or a running process.

Das oben beschriebene Produkt der Erklärung erfüllt die einschlägigen Harmonisierungsrechtsvorschriften der Union:
The object of the declaration described above is in conformity with the relevant Union harmonisation legislation:

EN 61326-1:2013 **EN 61010-1:2010/A1:2019/AC:2019-04**

Die alleinige Verantwortung für die Ausstellung dieser Konformitätserklärung trägt der Hersteller.
This declaration of conformity is issued under the sole responsibility of the manufacturer.

Dokumentationsverantwortlicher für diese Konformitätserklärung ist Herr Stefan Eschweiler mit Anschrift am Firmensitz.
The person authorized to compile the technical file is Mr. Stefan Eschweiler located at the company's address.

Ratingen, den 09.05.2023

Stefan Eschweiler
Geschäftsführer – *Managing Director*

Frank Pospiech
Geschäftsführer – *Managing Director*

Bühler Technologies GmbH, Harkortstr. 29, D-40880 Ratingen,
Tel. +49 (0) 21 02 / 49 89-0, Fax. +49 (0) 21 02 / 49 89-20
Internet: www.buehler-technologies.com

UK Declaration of Conformity

The manufacturer Bühler Technologies GmbH declares, under the sole responsibility, that the product complies with the requirements of the following UK legislation:

Electrical Equipment Safety Regulations 2016

The following legislation were regarded:

Electromagnetic Compatibility Regulations 2016

Products: Heated Sample Gas Probes
Types: GAS 222.14, GAS 222.15, GAS 222.17, GAS 222.20, GAS 222.21, GAS 222.31, GAS 222.35, GAS 222.40

The equipment is intended for gas sampling from flue gas or a running process.

The object of the declaration described above is in conformity with the relevant designated standards:

EN 61010-1:2010/A1:2019/AC:2019-04

EN 61326-1:2013

Ratingen in Germany, 09.05.2023

Stefan Eschweiler
Managing Director

Frank Pospiech
Managing Director

Bühler Technologies GmbH, Harkortstr. 29, D-40880 Ratingen,
Tel. +49 (0) 21 02 / 49 89-0, Fax. +49 (0) 21 02 / 49 89-20
Internet: www.buehler-technologies.com

Accessories for
Sample Gas Probe GAS 222

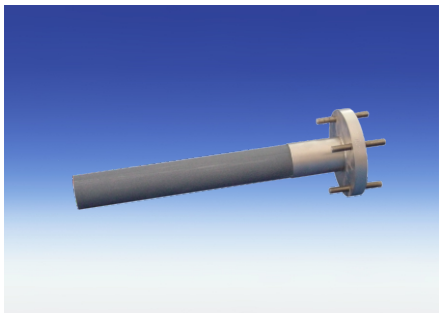

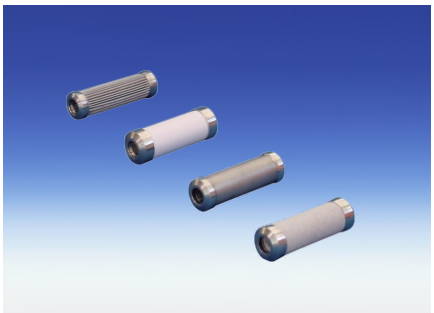

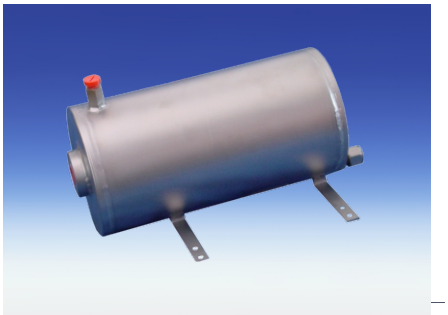

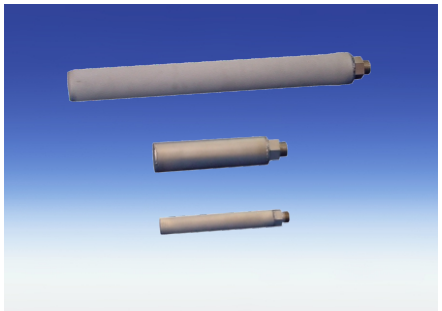

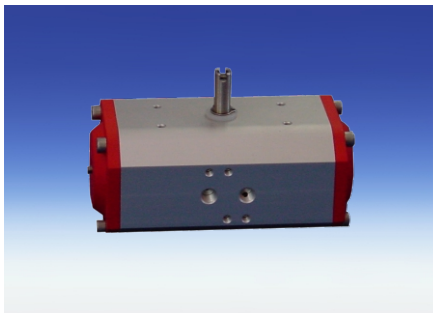

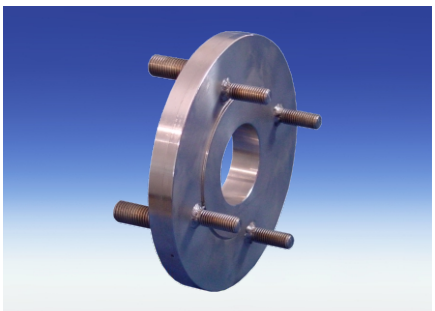

- **Sample tubes**
- **In-situ filters**
- **Extensions**

Page 2 - 4

- **Downstream filters**
- **Cal gas connections**
- **Adapter flanges**

Page 8

- **Capacitive vessel**
- **Pneumatic actuators**
- **3/2-way-solenoid valves**
- **Blowback controllers**

Page 5 - 7

For general information, see data sheet “Sample gas probes GAS 222” DE461000.

Bühler Technologies GmbH
D - 40880 Ratingen, Harkortstr. 29
Tel.: + 49 (0) 2102 / 4989-0 Fax: + 49 (0) 2102 / 4989-20
Internet: www.buehler-technologies.com
e-mail: analyse@buehler-technologies.com

Sample tubes, in-situ filters and extensions

- Various materials
- Various dimensions
- Heated or nonheated extensions

Sample tube					222.10	222.11	222.30	222.35-U	222.15	222.17	222.20	222.21	222.31	222.35	222.20 DH	222.20 Atex	222.21 Atex	222.31 Atex	222.35 Atex	222.20 Atex2	222.21 Atex2	222.31 Atex2	222.35 Atex2	222.10 ANSI	222.11 ANSI/ CSA	222.30 ANSI/ CSA	222.35-U ANSI/ CSA	222.15 ANSI/ CSA	222.17 ANSI/ CSA	222.20 ANSI/ CSA	222.21 ANSI/ CSA	222.31 ANSI/ CSA	222.35 ANSI/ CSA	222.20 DH ANSI/ CSA	222.20 AMEX	222.21 AMEX	222.31 AMEX	222.35 AMEX	Type GAS
	Material	**T max.**	**Length**	**Part No.:**																																		
01	1.4571	600°C	300 mm	462220010300	X	X			X	X	X	X			X	X	X			X	X			X	X			X	X	X	X			X	X	X		
01	1.4571	600°C	500 mm	462220010500	X	X			X	X	X	X			X	X	X			X	X			X	X			X	X	X	X			X	X	X		
01	1.4571	600°C	1000 mm	462220011000	X	X			X	X	X	X			X	X	X			X	X			X	X			X	X	X	X			X	X	X		
01	1.4571	600°C	1500 mm	462220011500	X	X			X	X	X	X			X	X	X			X	X			X	X			X	X	X	X			X	X	X		
01	1.4571	600°C	2000 mm	462220012000	X	X			X	X	X	X			X	X	X			X	X			X	X			X	X	X	X			X	X	X		
02	Ceramics / 1.4571	1600°C	0.5 m	4622200205	X	X			X	X	X	X			X	X	X			X	X			X	X			X	X	X	X			X	X	X		
02	Ceramics / 1.4571	1600°C	1.0 m	4622200210	X	X			X	X	X	X			X	X	X			X	X			X	X			X	X	X	X			X	X	X		
02	Ceramics / 1.4571	1600°C	1.5 m	4622200215	X	X			X	X	X	X			X	X	X			X	X			X	X			X	X	X	X			X	X	X		
06	Hastelloy / 1.4571	400°C	500 mm	462220060500	X	X			X	X	X	X			X	X	X			X	X			X	X			X	X	X	X			X	X	X		
06	Hastelloy / 1.4571	400°C	1000 mm	462220061000	X	X			X	X	X	X			X	X	X			X	X			X	X			X	X	X	X			X	X	X		
06	Hastelloy / 1.4571	400°C	1500 mm	462220061500	X	X			X	X	X	X			X	X	X			X	X			X	X			X	X	X	X			X	X	X		
06	Hastelloy / 1.4571	400°C	2000 mm	462220062000	X	X			X	X	X	X			X	X	X			X	X			X	X			X	X	X	X			X	X	X		
08	Inconel / 1.4571	1050°C	500 mm	462220040500	X	X			X	X	X	X			X	X	X			X	X			X	X			X	X	X	X			X	X	X		
08	Inconel / 1.4571	1050°C	1000 mm	462220041000	X	X			X	X	X	X			X	X	X			X	X			X	X			X	X	X	X			X	X	X		
08	Inconel / 1.4571	1050°C	1500 mm	462220041500	X	X			X	X	X	X			X	X	X			X	X			X	X			X	X	X	X			X	X	X		
08	Inconel / 1.4571	1050°C	2000 mm	462220042000	X	X			X	X	X	X			X	X	X			X	X			X	X			X	X	X	X			X	X	X		
08	Inconel / 1.4571	1050°C	2500 mm	462220042500	X	X			X	X	X	X			X	X	X			X	X			X	X			X	X	X	X			X	X	X		
12	1.4571	600°C	500 mm	462220160500	X	X			X	X	X	X			X	X	X			X	X			X	X			X	X	X	X			X	X	X		
12	1.4571	600°C	1000 mm	462220161000	X	X			X	X	X	X			X	X	X			X	X			X	X			X	X	X	X			X	X	X		
12	1.4571	600°C	1500 mm	462220161500	X	X			X	X	X	X			X	X	X			X	X			X	X			X	X	X	X			X	X	X		
12	1.4571	600°C	2000 mm	462220162000	X	X			X	X	X	X			X	X	X			X	X			X	X			X	X	X	X			X	X	X		
13	Kanthal / 1.4571	1400°C	up to 1 m	46222017	X	X			X	X	X	X			X					X	X			X	X			X	X	X	X			X	X	X		
	Sample tube with demister PVDF/ETFE	120°C	800 mm	46222040	X	X			X	X	X	X			X									X	X			X	X	X	X			X				
	Demister ETFE / as spare part	120°C		462220402	X	X			X	X	X	X			X									X	X			X	X	X	X			X				
	Sample tube with demister / 1.4571	400°C	300 mm	4622204203	X	X			X	X	X	X			X									X	X			X	X	X	X			X				
	Sample tube with demister / 1.4571	400°C	500 mm	4622204205	X	X			X	X	X	X			X									X	X			X	X	X	X			X				
	Sample tube with demister / 1.4571	400°C	1000 mm	4622204210	X	X			X	X	X	X			X									X	X			X	X	X	X			X				
	Demister 1.4571 / as spare part	400°C		4611004	X	X			X	X	X	X			X									X	X			X	X	X	X			X				

Sample tubes, in-situ filters and extensions

- Various materials
- Various dimensions
- Heated or nonheated extensions

In-situ filter						222.10	222.11	222.30	222.35-U	222.15	222.17	222.20	222.21	222.31	222.35	222.20 DH	222.20 Atex	222.21 Atex	222.31 Atex	222.35 Atex	222.20 Atex2	222.21 Atex2	222.31 Atex2	222.35 Atex2	222.10 ANSI	222.11 ANSI/ CSA	222.30 ANSI/ CSA	222.35-U ANSI/ CSA	222.15 ANSI/ CSA	222.17 ANSI/ CSA	222.20 ANSI/ CSA	222.21 ANSI/ CSA	222.31 ANSI/ CSA	222.35 ANSI/ CSA	222.20 DH ANSI/ CSA	222.20 AMEX	222.21 AMEX	222.31 AMEX	222.35 AMEX	Type GAS
	Material	**T max.**	**Length**	**Pore size**	**Part No.:**																																			
03	stainless steel	600°C	237 mm	5 µm	46222303		X	X					X	X				X	X			X	X			X	X					X	X				X	X		
03F	stainless steel	600°C	237 mm	0.5 µm	46222303F*		X	X					X	X				X	X			X	X			X	X					X	X				X	X		
03H	Hastelloy	600°C	237 mm	5 µm	46222303H*		X	X					X	X				X	X			X	X			X	X					X	X				X	X		
03HF	Hastelloy	600°C	237 mm	0.5 µm	46222303HF*		X	X					X	X				X	X			X	X			X	X					X	X				X	X		
031	stainless steel, with volume displacer	600°C	237 mm	5 µm	462223031		X	X					X	X				X	X			X	X			X	X					X	X				X	X		
031F	stainless steel, with volume displacer	600°C	237 mm	0.5 µm	462223031F*		X	X					X	X				X	X			X	X			X	X					X	X				X	X		
031H	Hastelloy, with volume displacer	600°C	237 mm	5 µm	462223031H*		X	X					X	X				X	X			X	X			X	X					X	X				X	X		
031HF	Hastelloy, with volume displacer	600°C	237 mm	0.5µm	462223031HF*		X	X					X	X				X	X			X	X			X	X					X	X				X	X		
04	stainless steel	600°C	538 mm	5 µm	46222304		X	X					X	X				X	X			X	X			X	X					X	X				X	X		
04F	stainless steel	600°C	538 mm	0.5 µm	46222304F*		X	X					X	X				X	X			X	X			X	X					X	X				X	X		
04H	Hastelloy	600°C	538 mm	5 µm	46222304H*		X	X					X	X				X	X			X	X			X	X					X	X				X	X		
04HF	Hastelloy	600°C	538 mm	0.5 µm	46222304HF*		X	X					X	X				X	X			X	X			X	X					X	X				X	X		
041	stainless steel, with volume displacer	600°C	538 mm	5 µm	462223041		X	X					X	X				X	X			X	X			X	X					X	X				X	X		
041F	stainless steel, with volume displacer	600°C	538 mm	0.5 µm	462223041F*		X	X					X	X				X	X			X	X			X	X					X	X				X	X		
041H	Hastelloy, with volume displacer	600°C	538 mm	5 µm	462223041H*		X	X					X	X				X	X			X	X			X	X					X	X				X	X		
041HF	Hastelloy, with volume displacer	600°C	538 mm	0.5 µm	462223041HF*		X	X					X	X				X	X			X	X			X	X					X	X				X	X		
07	Ceramics / 1.4571	1000°C[1)]	478 mm	2 µm	46222307		X	X					X	X				X	X			X	X																	
07F	Ceramics / 1.4571	1000°C[1)]	478 mm	0.3 µm	46222307F*		X	X					X	X				X	X																					
07 ANSI	Ceramics / 1.4571	1000°C[1)]	478 mm	2 µm	46222307C																					X	X					X	X				X	X		
35	stainless steel	600°C	229 mm	5 µm	46222359				X						X					X				X					X					X						X
35F	stainless steel	600°C	229 mm	0.5 µm	46222359F*				X						X					X				X					X					X						X

1) Hot gas filtration, oxidizing atmosphere max. 750 °C
Hot gas filtration, reductive atmosphere max. 600 °C

* Prices and delivery time on request

Sample tubes, in-situ filters and extensions

- Various materials
- Various dimensions
- Heated or nonheated extensions

						222.10	222.11	222.30	222.35-U	222.15	222.17	222.20	222.21	222.31	222.35	222.20 DH	222.20 Atex	222.21 Atex	222.31 Atex	222.35 Atex	222.20 Atex2	222.21 Atex2	222.31 Atex2	222.35 Atex2	222.10 ANSI	222.11 ANSI/ CSA	222.30 ANSI/ CSA	222.35-U ANSI/ CSA	222.15 ANSI/ CSA	222.17 ANSI/ CSA	222.20 ANSI/ CSA	222.21 ANSI/ CSA	222.31 ANSI/ CSA	222.35 ANSI/ CSA	222.20 DH ANSI/ CSA	222.20 AMEX	222.21 AMEX	222.31 AMEX	222.35 AMEX	**Type GAS**
Protection shield					**Part No.:**																																			
for in-situ filter 03					462223034		X	X					X	X				X	X			X	X			X	X					X	X				X	X		
for in-situ filter 04					462223044		X	X					X	X				X	X			X	X			X	X					X	X				X	X		
Extensions																																								
Typ		Material	Mains voltage	Length																																				
G3/4	nonheated	1.4571		0.2 m	4622230320200	X	X	X		X	X	X	X	X		X	X	X	X		X	X	X		X	X	X		X	X	X	X	X		X	X	X	X		
G3/4	nonheated	1.4571		0.4 m	4622230320400	X	X	X		X	X	X	X	X		X	X	X	X		X	X	X		X	X	X		X	X	X	X	X		X	X	X	X		
G3/4	nonheated	1.4571		0.5 m	4622230320500	X	X	X		X	X	X	X	X		X	X	X	X		X	X	X		X	X	X		X	X	X	X	X		X	X	X	X		
G3/4	nonheated	1.4571		0.7 m	4622230320700	X	X	X		X	X	X	X	X		X	X	X	X		X	X	X		X	X	X		X	X	X	X	X		X	X	X	X		
G3/4	nonheated	1.4571		1 m	4622230321000	X	X	X		X	X	X	X	X		X	X	X	X		X	X	X		X	X	X		X	X	X	X	X		X	X	X	X		
G3/4	nonheated	1.4571		1,2 m	4622230321200	X	X	X		X	X	X	X	X		X	X	X	X		X	X	X		X	X	X		X	X	X	X	X		X	X	X	X		
G3/4	nonheated	1.4571		1,5 m	4622230321500	X	X	X		X	X	X	X	X		X	X	X	X		X	X	X		X	X	X		X	X	X	X	X		X	X	X	X		
G3/4	nonheated	1.4571		2 m	4622230322000	X	X	X		X	X	X	X	X		X	X	X	X		X	X	X		X	X	X		X	X	X	X	X		X	X	X	X		
G1/2	nonheated	1.4571		0,25 m	4622235910250				X						X					X				X				X						X					X	
G1/2	nonheated	1.4571		0,5 m	4622235910500				X						X					X				X				X						X					X	
G1/2	nonheated	1.4571		0,7 m	4622235910700				X						X					X				X				X						X					X	
G1/2	nonheated	1.4571		1,5 m	4622235911500				X						X					X				X				X						X					X	
GF	heated*	1.4571	230V	0.5 m	462223036							X	X	X																										
GF	heated*	1.4571	230V	1 m	462223033							X	X	X																										
GF	ANSI / CSA,heated*	1.4571	115V	0.5 m	462223036C1																										X	X	X							
GF	ANSI / CSA,heated*	1.4571	115V	1 m	462223033C1																										X	X	X							
Controller for heated extension integrated into probe controller					46222292							X	X	X																	X	X	X							

---

* Mounting is only possible at a plain flange without G3/4 thread. Therefore a G has to be added to the part number, e.g. 4622220G. It is not possible to add a heated extension after delivery.

Entnahmerohre / tubes

Typ	L	ø	A	SW
01	var.	12	G3/4	36
06	var.	12	G3/4	36
08	var.	21,3	G3/4	36
12	var.	20	G3/4	36
13	var.	15	G3/4	36
14	var.	18	G3/4	36

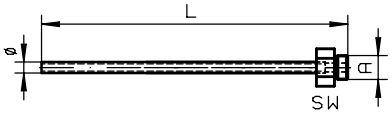

Typ	L	ø	A	SW
02-0,5	500	24	G3/4	36
02-1,0	1000	24	G3/4	36
02-1,5	1500	24	G3/4	36

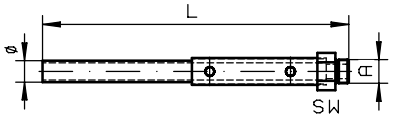

Verlängerungen / extensions

Unbeheizt / unheated

Typ	L	A	SW
G3/4	0,2-2 m	G3/4	36
G1/2	0,25-1,5m	G1/2	27

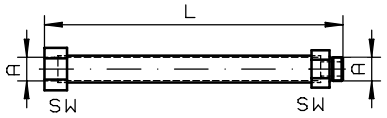

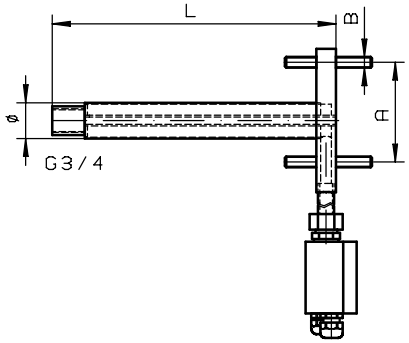

Beheizt / heated

Typ	L	ø	A	B
GF	500	40	DN65 PN6	M12
GF	1000	40	DN65 PN6	M12
GF ANSI/CSA	500	40	DN3"-150	M16
GF ANSI/CSA	1000	40	DN3"-150	M16

Eintritssfilter / in-situ filter

Typ	L	ø	A	SW
03	237	51	G3/4	36
031	237	51	G3/4	36
04	538	60	G3/4	36
041	538	60	G3/4	36
35	229	29	G1/2	27

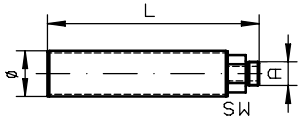

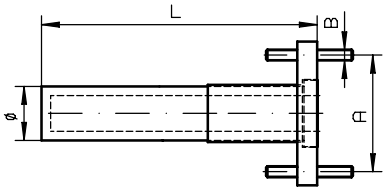

Typ	L	ø	A	B
07	500	60	DN65 PN6	M12
07 ANSI	500	60	DN3"-150	M16

Abweisblech / protection shield

Eintrittsfilter / in-situ filter 03

Eintrittsfilter / in-situ filter 04

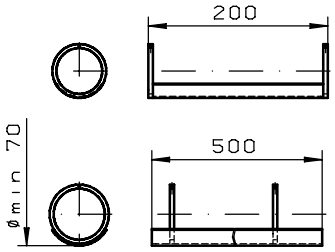

alle Kanten gratfrei	ALLE RECHTE VORBEHALTEN				Maße ohne Toleranzangabe nach ISO 2768-mK		Maßstab 1 5	(Gewicht)
Oberflächenbearbeitungszeichen							Werkstoff	
						Datum	Name	Benennung
					Bearb	21 01 2004	Brinkmann	Rohre/Filter/Verlängerungen tubes/filter/extensions GAS 222
					Gepr			
					BÜHLER			Zeichng -Nr 46/107-Z01-01-3A
	a	neu	29 09 06	Br				Art -Nr
	Zust	Änd	Datum	Name	Ers für			ARBEITSANWEISUNG

Blowback

- With ball valve or solenoid valve
- Heated or nonheated
- Manuell or automatic control

Capacitive vessel	Ambient temperature	Part No.:	222.10	222.11	222.30	222.35-U	222.15	222.17	222.20	222.21	222.31	222.35	222.20 DH	222.20 Atex	222.21 Atex	222.31 Atex	222.35 Atex	222.20 Atex2	222.21 Atex2	222.31 Atex2	222.35 Atex2	222.10 ANSI	222.11 ANSI/ CSA	222.30 ANSI/ CSA	222.35-U ANSI/ CSA	222.15 ANSI/ CSA	222.17 ANSI/ CSA	222.20 ANSI/ CSA	222.21 ANSI/ CSA	222.31 ANSI/ CSA	222.35 ANSI/ CSA	222.20 DH ANSI/ CSA	222.20 AMEX	222.21 AMEX	222.31 AMEX	222.35 AMEX	Type GAS
PAV 01		46222PAV		X	X	X				X	X	X			X	X	X		X	X	X		X	X	X				X	X	X			X	X	X	
Accessories for capacitive vessel																																					
ball valve		46222PAVKH		X	X	X				X	X	X			X	X	X		X	X	X		X	X	X				X	X	X			X	X	X	
2/2-way-MV 24VDC*	-10 ... +55°C	46222PAVMV1		X	X	X				X	X	X																									
2/2-way-MV 110V 50Hz	-10 ... +55°C	46222PAVMV2		X	X	X				X	X	X																									
2/2-way-MV 220-230V 50/60Hz	-10 ... +55°C	46222PAVMV3		X	X	X				X	X	X																									
2/2-way-MV 24VUC Atex II 2G/D EEx m II T4 IP65	-10 ... +60°C	46222PAVMV4		X	X	X									X	X	X		X	X	X																
2/2-way-MV 110VUC Atex II 2G/D EEx m II T4 IP65	-10 ... +60°C	46222PAVMV5		X	X	X									X	X	X		X	X	X																
2/2-way-MV 230VUC Atex II 2G/D EEx m II T4 IP65	-10 ... +60°C	46222PAVMV6		X	X	X									X	X	X		X	X	X																
2/2- way- AMEX 24 V/ 60 Hz Cl. I Div 2	-10 ... +55°C	46222PAVMV14																					X	X	X				X	X	X			X	X	X	
2/2- way- AMEX 120 V/ 60 Hz Cl. I Div 2	-10 ... +55°C	46222PAVMV8																					X	X	X				X	X	X			X	X	X	
2/2- way- AMEX 240 V/ 60 Hz Cl. I Div 2	-10 ... +55°C	46222PAVMV9																					X	X	X				X	X	X			X	X	X	
self regulated heating system 115/230V 50/60Hz		46222PAVHZ1		X	X	X				X	X	X											X	X	X				X	X	X						
self regulated heating system 115-230V 50/60Hz Atex 2 II 3G Ex nA IIC T3 Gc X		46222PAVHZ2																	X	X	X																
self regulated heating system 115-230V 50/60Hz Atex 2 II 3G Ex nA IIC T4 Gc X		46222PAVHZ3																	X	X	X																
self regulated heating system AMEX,115-230V,50/60 Hz, Cl. I Div 2 B,C,D,T3		46222PAVHZ4																																X	X	X	
self regulated heating system AMEX,115-230V,50/60 Hz, Cl. I Div 2 B,C,D,T4		46222PAVHZ6																																X	X	X	
support of pressurised vessel		462223502				X																			X												
Bourdon tube pressure gauge 0-10 bar		46222PAVMA		X	X	X				X	X	X			X	X	X		X	X	X		X	X	X				X	X	X			X	X	X	
Pneumatic actuators																																					
spring return, opened unpressurised		46222008		X	X					X	X				X	X			X	X			X	X					X	X				X	X		
spring return, closed unpressurised		46222030		X	X					X	X				X	X			X	X			X	X					X	X				X	X		
double action		46222009		X	X					X	X																										
limit switch		9008928		X	X					X	X																										
limit switch Atex II 2G/3D IIC T6 IP65		9008930													X	X			X	X																	
limit switch Atex II 2G/2D IIC T6 IP65		9027002													X	X			X	X																	
3/2-way-SV for controlling of pneumatic actuator																																					
24 VDC	-10 ... +55°C	46222075		X	X					X	X																										
110 V 50 Hz	-10 ... +55°C	46222076		X	X					X	X																										
230 V 50 Hz	-10 ... +55°C	46222077		X	X					X	X																										
ATEX 24 V UC II 2G/D EEx m II T4	-10 ... +60°C	46222078		X	X										X	X			X	X																	
ATEX 110 V UC II 2G/D EEx m II T4	-10 ... +60°C	46222079		X	X										X	X			X	X																	
ATEX 230 V UC II 2G/D EEx m II T4	-10 ... +60°C	46222080		X	X										X	X			X	X																	
AMEX 24 V 60 Hz, NPT1/4", Cl. I Div 2	-10 ... +55°C	46222116																					X	X					X	X				X	X		
AMEX 120 V 60 Hz, NPT1/4", Cl. I Div 2	-10 ... +55°C	46222050																					X	X					X	X				X	X		
AMEX 240 V 60 Hz, NPT1/4", Cl. I Div 2	-10 ... +55°C	46222056																					X	X					X	X				X	X		
5/2-way-SV for controlling of pneumatic actuator	-10 ... +70°C	9148000117		X	X					X	X																										
Blowback controller																																					
RSS 24 VDC, IP65		46222199		X	X	X				X	X	X																									
RSS 115/230 VAC, IP65		46222299		X	X	X				X	X	X																									
RSS-MC integrated into probe controller cabinet		46222392								X	X	X																	X	X	X						

*max. pressure 6 bar

Details:

A) Blowback

Ordering note for capacitive vessel:

For attachment to GAS 222.11 / 30 / 35-U, a support is required.

Ordering note for pneumatic actuator:

If a blowback controller is required, only actuator P/N 46222030 is possible.

We advise the installation of a position indicator switch to control the pneumatic actuator.

Integrated blowback controller in the probe controller

In addition to the stand-alone blowback controller (RRS), an integrated blowback controller is optionally available

Blowback cycle time and actual blowback time can be adjusted via the keys and menu of the controller. The blowback and manual operation will be shown on the display. The blowback controller can be programmed via the keys – manual or automatic operation is possible. Besides the status output of the controller, a blowback status signal is provided. Blowback will be usually initiated by signals coming from the main controls.

If the position indicator switch is installed, the controller will use this input for the process logic.

B) Hazardous Areas

Please note that installed accessories may change the approved category of the probe.
Follow strictly the advices given in the installation- and operation manual and regard the marking on the type plate.

Sample Gas Probe GAS 222.xx Atex		
Model	**with Accessories**	**resuting restircted area; marking**
21 Atex, 31 Atex, 35 Atex	Pressure vessel PAV 01 (Part-No. 46222PAV with accessories)	II 1D / 2GD
21 Atex, 31 Atex,	In situ filter*, ceramics (Art.-Nr.:46222307 + 46222307F)	II 1D 3G / 2GD
20 Atex , 21 Atex,	Downstream filter*, ceramic (Part-No. 46222026 + 46222026P)	II 1D 3G / 2GD
20 Atex, 21 Atex,	Sample tube (Part-No. 46222001, 462220011, 46222006, 46222004, 46222016)	II 1G / 2GD
20 Atex, 21 Atex,	Sample tube**, ceramics (Part-No. 4622200205, 4622200210, 4622200215)	II 3G / 2GD
21 Atex, 31 Atex,	Pneumatic cylinder with end switch Atex (Part-No. 46222019)	II 1GD / 2G3D

* Accessory not suitable for sampling dust with extremely low ignition energy < 3mJ.
** When gases are sampled from Zone 2, ceramic sample tube must be used only if application related or process related electrostatic charging is eliminated.

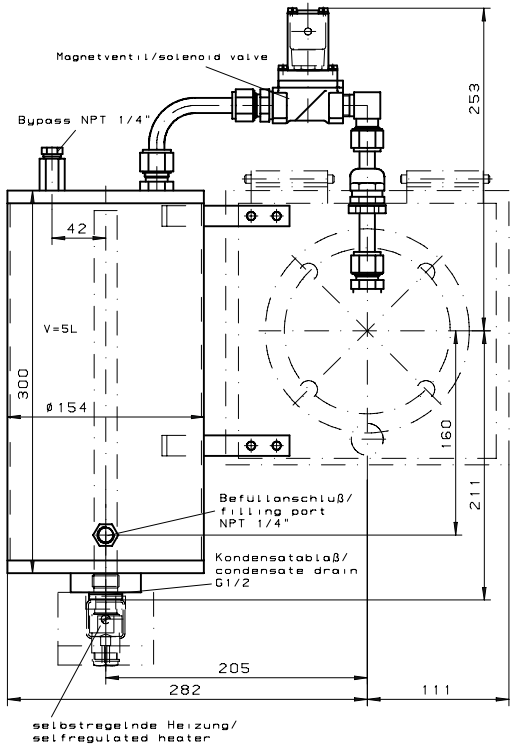

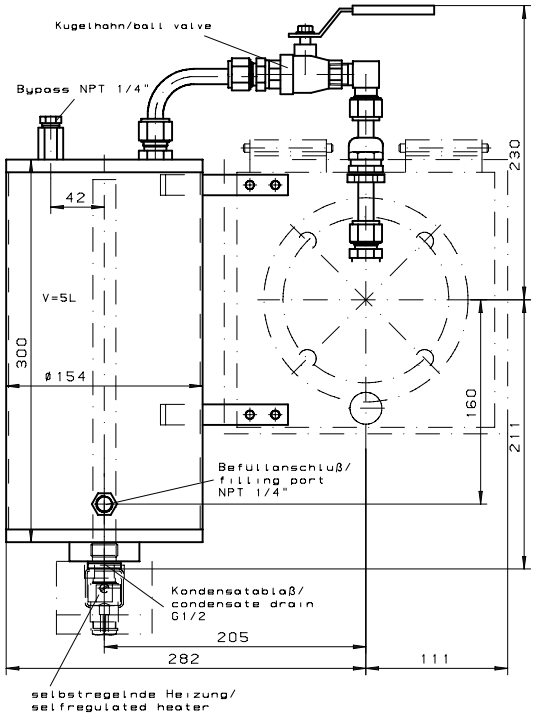

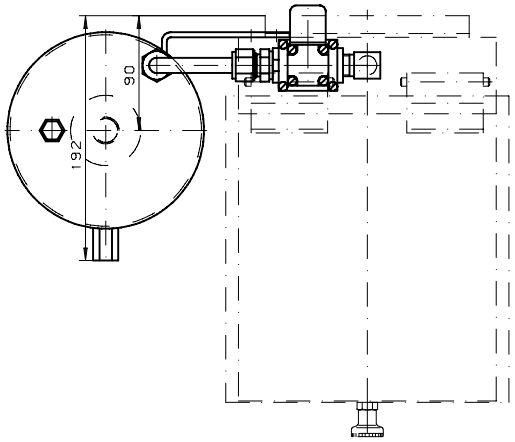

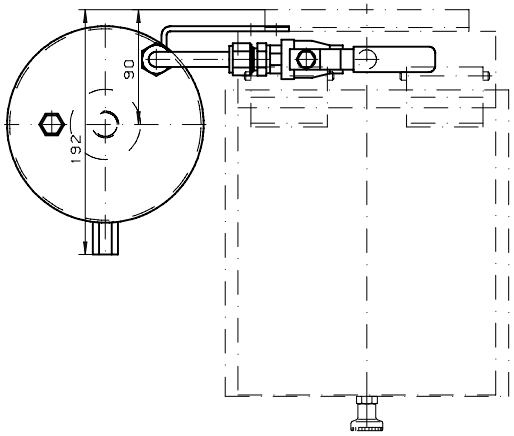

max Betriebsdruck/operating pressure 10bar
max Betriebstemperatur/operating temperature 50°C

"Änderungen nur nach Rücksprache
mit dem Atexbeauftragten zulässig"

alle Kanten gratfrei	ALLE RECHTE VORBEHALTEN	Maße ohne Toleranzangabe nach ISO 2768-mK	Maßstab 1 2,5 (Gewicht)
Oberflächenbearbeitungszeichen			Werkstoff
		Datum / Name	Benennung
		Bearb 05 07 2004 Brinkmann	Druckluftbehälter/ capacitive vessel PAV 01
		Gepr	
		BÜHLER	Zeichng -Nr 46/106-Z01-01-2
			Art -Nr
Zust / Änd / Datum / Name		Ers für	ARBEITSANWEISUNG

Downstream filter elements and further options

				222.10	222.11	222.30	222.35-U	222.15	222.17	222.20	222.21	222.31	222.35	222.20 DH	222.20 Atex	222.21 Atex	222.31 Atex	222.35 Atex	222.20 Atex2	222.21 Atex2	222.31 Atex2	222.35 Atex2	222.10 ANSI	222.11 ANSI/ CSA	222.30 ANSI/ CSA	222.35-U ANSI/ CSA	222.15 ANSI/ CSA	222.17 ANSI/ CSA	222.20 ANSI/ CSA	222.21 ANSI/ CSA	222.31 ANSI/ CSA	222.35 ANSI/ CSA	222.20 DH ANSI/ CSA	222.20 AMEX	222.21 AMEX	222.31 AMEX	222.35 AMEX	**Type GAS**
Downstream filter			**Part no.:**																																			
Material	**O-Rings**	**Pore size**																																				
Ceramics	Viton	3 µm	46222026	X	X			X	X	X	X			X	X	X			X	X			X	X			X	X	X	X			X	X	X		
Ceramics	Perfluorelastomer	3 µm	46222026P	X	X			X	X	X	X			X	X	X			X	X			X	X			X	X	X	X			X	X	X		
Sintered stainless steel	Viton	5 µm	46222010	X	X			X	X	X	X			X	X	X			X	X			X	X			X	X	X	X			X	X	X		
Sintered stainless steel	Perfluorelastomer	5 µm	46222010P	X	X			X	X	X	X			X	X	X			X	X			X	X			X	X	X	X			X	X	X		
Sintered stainless steel	Viton	0,5 µm	46222010F*	X	X			X	X	X	X			X	X	X			X	X			X	X			X	X	X	X			X	X	X		
Sintered stainless steel	Perfluorelastomer	0,5 µm	46222010FP*	X	X			X	X	X	X			X	X	X			X	X			X	X			X	X	X	X			X	X	X		
Pleated stainless steel	Viton	10 µm	46222011	X	X			X	X	X	X			X	X	X			X	X			X	X			X	X	X	X			X	X	X		
Pleated stainless steel	Perfluorelastomer	10 µm	46222011P	X	X			X	X	X	X			X	X	X			X	X			X	X			X	X	X	X			X	X	X		
Handle to hold the micro-fibreglass filter element			46222067	X	X			X	X	X	X			X									X	X			X	X	X	X			X	X	X		
Micro glass fiber with silicate binder	Viton		462220671	X	X			X	X	X	X			X									X	X			X	X	X	X			X	X	X		
Micro glass fiber with silicate binder	Perfluorelastomer		462220671P	X	X			X	X	X	X			X									X	X			X	X	X	X			X	X	X		
Closing handle with filter tube and filter wool	Viton		46222163	X	X			X	X	X	X			X									X	X			X	X	X	X			X	X	X		
Closing handle with filter tube and filter wool	Perfluorelastomer		46222163P	X	X			X	X	X	X			X									X	X			X	X	X	X			X	X	X		
Filter wool			46222167	X	X			X	X	X	X			X									X	X			X	X	X	X			X	X	X		
Set of O-rings Viton incl. grease			46222012	X	X			X	X	X	X			X	X	X			X	X			X	X			X	X	X	X			X	X	X		
Set of O-rings Perfluorelastomer incl. grease			46222024	X	X			X	X	X	X			X	X	X			X	X			X	X			X	X	X	X			X	X	X		
Further options																																						
Adapter flange ANSI 3“-150lbs			46222014	X	X	X	X	X	X	X	X	X	X	X	X	X	X	X	X	X	X	X															
Cal gas connection ø6mm			46222309	X	X	X	X	X	X	X	X	X	X	X	X	X	X	X	X	X	X	X	X	X	X	X	X	X	X	X	X	X	X	X	X	X	X	X
Cal gas connection ø6mm with check valve			46222311	X	X	X	X	X	X	X	X	X	X	X	X	X	X	X	X	X	X	X	X	X	X	X	X	X	X	X	X	X	X	X	X	X	X	X
Cal gas connection ø1/4"			46222336	X	X	X	X	X	X	X	X	X	X	X	X	X	X	X	X	X	X	X	X	X	X	X	X	X	X	X	X	X	X	X	X	X	X	X
Cal gas connection ø1/4" with check vavle			46222337	X	X	X	X	X	X	X	X	X	X	X	X	X	X	X	X	X	X	X	X	X	X	X	X	X	X	X	X	X	X	X	X	X	X	X
Fitting for sample gas port ø6mm			9008173	X	X	X	X	X	X	X	X	X	X	X	X	X	X	X	X	X	X	X	X	X	X	X	X	X	X	X	X	X	X	X	X	X	X	X
Fitting for sample gas port ø8mm			9008174	X	X	X	X	X	X	X	X	X	X	X	X	X	X	X	X	X	X	X	X	X	X	X	X	X	X	X	X	X	X	X	X	X	X	X
Fitting for back wash port ø12mm			9008369		X	X	X				X	X	X			X	X	X		X	X	X		X	X	X				X	X	X			X	X	X
Ffitting for sample gas port ø1/4"			9008584	X	X	X	X	X	X	X	X	X	X	X	X	X	X	X	X	X	X	X	X	X	X	X	X	X	X	X	X	X	X	X	X	X	X	X
Fitting for sample gas port ø3/8"			9008583	X	X	X	X	X	X	X	X	X	X	X	X	X	X	X	X	X	X	X	X	X	X	X	X	X	X	X	X	X	X	X	X	X	X	X
Fitting for back wash port ø1/2"			9028033		X	X	X				X	X	X			X	X	X		X	X	X		X	X	X				X	X	X			X	X	X
Locking screw G3/8 for backflush connection			9008084			X	X				X	X	X			X	X	X		X	X	X			X	X				X	X	X			X	X	X
Sealing ring for sealing the backflush connection with a locking screw			9009258			X	X				X	X	X			X	X	X		X	X	X			X	X				X	X	X			X	X	X
Mounting bracket with clamp ring for DN65 PN6			462220102					X																														
Mounting bracket with clamp ring for ANSI 3”-150 lbs			462220102C																								X											

* Prices and delivery time on request

RMA-Formular und Erklärung über Dekontaminierung
RMA-Form and explanation for decontamination

RMA-Nr./ RMA-No. _____

Die RMA-Nr. bekommen Sie von Ihrem Ansprechpartner im Vertrieb oder Service. Bei Rücksendung eines Altgeräts zur Entsorgung tragen Sie bitte in das Feld der RMA-Nr. "WEEE" ein./ You may obtain the RMA number from your sales or service representative. When returning an old appliance for disposal, please enter "WEEE" in the RMA number box.

Zu diesem Rücksendeschein gehört eine Dekontaminierungserklärung. Die gesetzlichen Vorschriften schreiben vor, dass Sie uns diese Dekontaminierungserklärung ausgefüllt und unterschrieben zurücksenden müssen. Bitte füllen Sie auch diese im Sinne der Gesundheit unserer Mitarbeiter vollständig aus./ This return form includes a decontamination statement. The law requires you to submit this completed and signed decontamination statement to us. Please complete the entire form, also in the interest of our employee health.

Firma/ Company

Firma/ Company	
Straße/ Street	
PLZ, Ort/ Zip, City	
Land/ Country	

Ansprechpartner/ Person in charge

Name/ Name	
Abt./ Dept.	
Tel./ Phone	
E-Mail	

Gerät/ Device	
Anzahl/ Quantity	
Auftragsnr./ Order No.	

Serien-Nr./ Serial No.	
Artikel-Nr./ Item No.	

Grund der Rücksendung/ Reason for return

- ☐ Kalibrierung/ Calibration
- ☐ Modifikation/ Modification
- ☐ Reklamation/ Claim
- ☐ Reparatur/ Repair
- ☐ Elektroaltgerät/ Waste Electrical & Electronic Equipment (WEEE)
- ☐ andere/ other

bitte spezifizieren/ please specify

Ist das Gerät möglicherweise kontaminiert?/ Could the equipment be contaminated?

☐ Nein, da das Gerät nicht mit gesundheitsgefährdenden Stoffen betrieben wurde./ No, because the device was not operated with hazardous substances.

☐ Nein, da das Gerät ordnungsgemäß gereinigt und dekontaminiert wurde./ No, because the device has been properly cleaned and decontaminated.

☐ Ja, kontaminiert mit:/ Yes, contaminated with: _____

☐	☐	☐	☐	☐	☐	☐	☐	☐
explosiv/ explosive	entzündlich/ flammable	brandfördernd/ oxidizing	komprimierte Gase/ compressed gases	ätzend/ caustic	giftig, Lebensgefahr/ poisonous, risk of death	gesundheitsgefährdend/ harmful to health	gesundheitsschädlich/ health hazard	umweltgefährdend/ environmental hazard

Bitte Sicherheitsdatenblatt beilegen!/ Please enclose safety data sheet!

Das Gerät wurde gespült mit:/ The equipment was purged with: _____

Diese Erklärung wurde korrekt und vollständig ausgefüllt und von einer dazu befugten Person unterschrieben. Der Versand der (dekontaminierten) Geräte und Komponenten erfolgt gemäß den gesetzlichen Bestimmungen.

This declaration has been filled out correctly and completely, and signed by an authorized person. The dispatch of the (decontaminated) devices and components takes place according to the legal regulations.

Falls die Ware nicht gereinigt, also kontaminiert bei uns eintrifft, muss die Firma Bühler sich vorbehalten, diese durch einen externen Dienstleister reinigen zu lassen und Ihnen dies in Rechnung zu stellen.

Should the goods not arrive clean, but contaminated, Bühler reserves the right, to comission an external service provider to clean the goods and invoice it to your account.

Firmenstempel/ Company Sign

Datum/ Date _____

rechtsverbindliche Unterschrift/ Legally binding signature

Bühler Technologies GmbH, Harkortstr. 29, D-40880 Ratingen
Tel. +49 (0) 21 02 / 49 89-0, Fax: +49 (0) 21 02 / 49 89-20
E-Mail: service@buehler-technologies.com
Internet: www.buehler-technologies.com

Vermeiden von Veränderung und Beschädigung der einzusendenden Baugruppe

Die Analyse defekter Baugruppen ist ein wesentlicher Bestandteil der Qualitätssicherung der Firma Bühler Technologies GmbH. Um eine aussagekräftige Analyse zu gewährleisten muss die Ware möglichst unverändert untersucht werden. Es dürfen keine Veränderungen oder weitere Beschädigungen auftreten, die Ursachen verdecken oder eine Analyse unmöglich machen.

Umgang mit elektrostatisch sensiblen Baugruppen

Bei elektronischen Baugruppen kann es sich um elektrostatisch sensible Baugruppen handeln. Es ist darauf zu achten, diese Baugruppen ESD-gerecht zu behandeln. Nach Möglichkeit sollten die Baugruppen an einem ESD-gerechten Arbeitsplatz getauscht werden. Ist dies nicht möglich sollten ESD-gerechte Maßnahmen beim Austausch getroffen werden. Der Transport darf nur in ESD-gerechten Behältnissen durchgeführt werden. Die Verpackung der Baugruppen muss ESD-konform sein. Verwenden Sie nach Möglichkeit die Verpackung des Ersatzteils oder wählen Sie selber eine ESD-gerechte Verpackung.

Einbau von Ersatzteilen

Beachten Sie beim Einbau des Ersatzteils die gleichen Vorgaben wie oben beschrieben. Achten Sie auf die ordnungsgemäße Montage des Bauteils und aller Komponenten. Versetzen Sie vor der Inbetriebnahme die Verkabelung wieder in den ursprünglichen Zustand. Fragen Sie im Zweifel beim Hersteller nach weiteren Informationen.

Einsenden von Elektroaltgeräten zur Entsorgung

Wollen Sie ein von Bühler Technologies GmbH stammendes Elektroprodukt zur fachgerechten Entsorgung einsenden, dann tragen Sie bitte in das Feld der RMA-Nr. „WEEE“ ein. Legen Sie dem Altgerät die vollständig ausgefüllte Dekontaminierungserklärung für den Transport von außen sichtbar bei. Weitere Informationen zur Entsorgung von Elektroaltgeräten finden Sie auf der Webseite unseres Unternehmens.

Avoiding alterations and damage to the components to be returned

Analysing defective assemblies is an essential part of quality assurance at Bühler Technologies GmbH. To ensure conclusive analysis the goods must be inspected unaltered, if possible. Modifications or other damages which may hide the cause or render it impossible to analyse are prohibited.

Handling electrostatically conductive components

Electronic assemblies may be sensitive to static electricity. Be sure to handle these assemblies in an ESD-safe manner. Where possible, the assembles should be replaced in an ESD-safe location. If unable to do so, take ESD-safe precautions when replacing these. Must be transported in ESD-safe containers. The packaging of the assemblies must be ESD-safe. If possible, use the packaging of the spare part or use ESD-safe packaging.

Fitting of spare parts

Observe the above specifications when installing the spare part. Ensure the part and all components are properly installed. Return the cables to the original state before putting into service. When in doubt, contact the manufacturer for additional information.

Returning old electrical appliances for disposal

If you wish to return an electrical product from Bühler Technologies GmbH for proper disposal, please enter "WEEE" in the RMA number box. Please attach the fully completed decontamination declaration form for transport to the old appliance so that it is visible from the outside. You can find more information on the disposal of old electrical appliances on our company’s website.

Bühler Technologies GmbH, Harkortstr. 29, D-40880 Ratingen
Tel. +49 (0) 21 02 / 49 89-0, Fax: +49 (0) 21 02 / 49 89-20
E-Mail: service@buehler-technologies.com
Internet: www.buehler-technologies.com