Gas Analysis

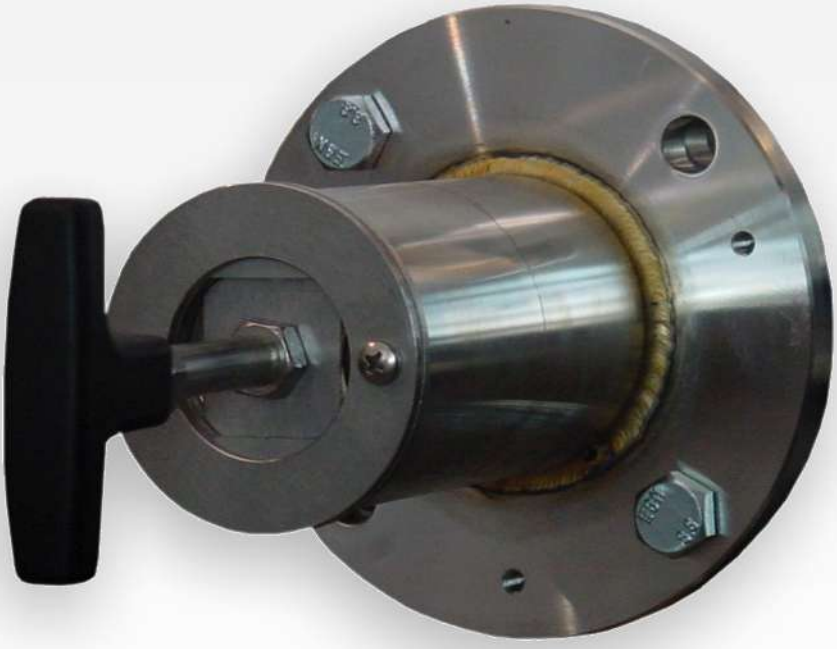

Sample gas probes

GAS 222.35U

Installation and Operation Instructions

Original instructions

BE460059
09/2021

Bühler Technologies GmbH, Harkortstr. 29, D-40880 Ratingen
Tel. +49 (0) 21 02 / 49 89-0, Fax: +49 (0) 21 02 / 49 89-20
E-Mail: analyse@buehler-technologies.com
Internet: www.buehler-technologies.com

Bühler Technologies GmbH, Harkortstr. 29, D-40880 Ratingen
Tel. +49 (0) 21 02 / 49 89-0, Fax: +49 (0) 21 02 / 49 89-20
Internet: www.buehler-technologies.com
E-Mail: analyse@buehler-technologies.com

Read this instruction carefully prior to installation and/or use. Pay attention particularly to all advises and safety instructions to prevent injuries. Bühler Technologies can not be held responsible for misusing the product or unreliable function due to unauthorised modifications.

Document information
Document No. BE460059
Version 09/2021

Table of Contents

1 Introduction

1.1 Intended Use

The sample gas probe is intended for installation into gas analysis systems in commercial applications.

Sample gas probes are among the main components in a gas conditioning system.

- Therefore also note the related drawing in the data sheet in the appendix.
- Before installing the device, verify the listed technical data meet the application parameters.
- Further verify all contents are complete.

Please refer to the type plate to identify your model. In addition to the job number/ID number, this also contains the article number and model designation.

Please note the specific values of the device when connecting, and the correct versions when ordering spare parts.

1.2 Type Plate

Example:

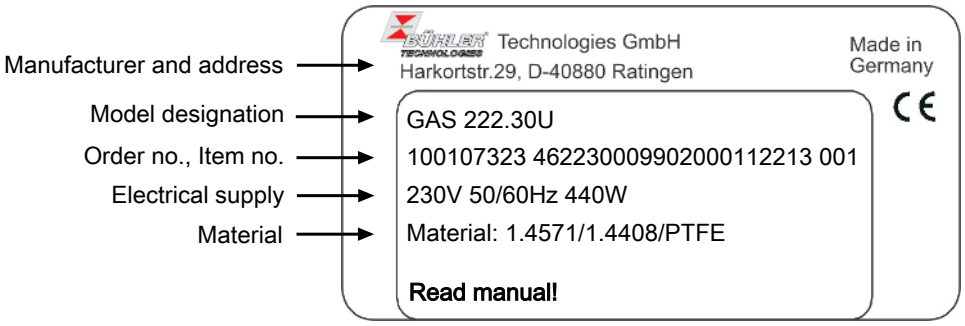

1.3 Scope of Delivery

- 1 x Sample gas probe
- 1 x Flange gasket and screws
- Product documentation
- Connection and mounting accessories (only optional)

1.4 Ordering Instructions

The item number is a code for the configuration of your unit. Please use the following model key:

4622235	0	9	9	0	0	X	0	0	X	X	X	X	X	X	Product Characteristics
															Flange / approval
															DIN DN65 PN6
															Power supply sample probe
															none
															Calibrating gas connection
						0									No calibrating gas connection
						1									6 mm
						2									6 mm + check valve
						3									1/4"
						4									1/4" + check valve
															Connection heated extension
															No
															Built-in temperature controller for heated extension
															No
															Blowback with air reservoir [1]
															Air reservoir bracket
															Air reservoir heating
									1						Yes
									9						No
															Built-in blowback control
										9					No
															Compressed air valve / valve voltage information
											0				Manual
											1				115 V
											2				230 V
											3				24 V
											9				None (if no blowback requested)
															Pneumatic drive for ball valve
												9			N/A
															Limit switch for pneumatic drive
													9		No
															Control valve for pneumatic drive
														9	No control valve

[1] For flammable sample gas, always use inert gas for blowback. Probe blowback prohibited when using explosive gases!

1.5 Product Description

Probe	Description
GAS 222.35-U	Probe with retractable inlet filter and blowback connection
Accessories	Please refer to the data sheet at the end of this manual for accessories for this probe

2 Safety instructions

2.1 Important advice

This unit may only be used if:

- The product is being used under the conditions described in the operating- and installation instructions, used according to the nameplate and for applications for which it is intended. Any unauthorized modifications of the device will void the warranty provided by Bühler Technologies GmbH,
- Complying with the threshold values specified in the data sheet and the instructions,
- Equipment is operated in intrinsically safe electric circuits.
- The controller itself is installed outside the explosive area,
- Monitoring equipment / protection devices must be connected correctly,
- Service and repair work not described in these instructions are performed by Bühler Technologies GmbH,
- Using genuine replacement parts.
- Erecting electrical systems in explosive areas requires compliance with regulation EN 60079-14.
- Additional national regulations pertaining to initial operation, operation, maintenance, repairs and disposal must be observed.
- These operating instructions are a part of the equipment. The manufacturer reserves the right to change performance-, specification- or technical data without prior notice. Please keep these instructions for future reference.

Signal words for warnings

DANGER	Signal word for an imminent danger with high risk, resulting in severe injuries or death if not avoided.
WARNING	Signal word for a hazardous situation with medium risk, possibly resulting in severe injuries or death if not avoided.
CAUTION	Signal word for a hazardous situation with low risk, resulting in damaged to the device or the property or minor or medium injuries if not avoided.
NOTICE	Signal word for important information to the product.

Warning signs

These instructions use the following warning signs:

	Warns of a general hazard		General notice
	Warns of voltage		Unplug from mains
	Warns not to inhale toxic gasses		Wear respiratory equipment
	Warns of corrosive liquids		Wear a safety mask
	Warns of explosive areas		Wear gloves

2.2 General Hazard Warnings

The maximum surface temperatures of the probes also vary based on operating conditions (steam temperature, sample gas inlet temperature, ambient temperature, fluid flow rate). When used in **explosive areas, also particularly note** the related hazard warnings.

The equipment must be installed by a professional familiar with the safety requirements and risks.

Be sure to observe the safety regulations and generally applicable rules of technology relevant for the installation site. Prevent malfunctions and avoid personal injuries and property damage.

The operator of the system must ensure:

- Safety notices and operating instructions are available and observed,
- The respective national accident prevention regulations are observed,
- The permissible data and operational conditions are maintained,
- Safety guards are used and mandatory maintenance is performed,
- Legal regulations are observed during disposal,
- compliance with national installation regulations.

Maintenance, Repair

Please note during maintenance and repairs:

- Repairs to the unit must be performed by Bühler authorised personnel.
- Only perform conversion-, maintenance or installation work described in these operating and installation instructions.
- Always use genuine spare parts.
- Do not install damaged or defective spare part. If necessary, visually inspect prior to installation to determine any obvious damage to the spare parts.

Always observe the applicable safety and operating regulations in the respective country of use when performing any type of maintenance.

NOTICE

When used in explosive areas

The basic version of the probe is not suitable for use in **Zone 1 or 21** explosive areas. The accessories selected (e.g. add-on parts such as solenoid valves, heated blowback vessel...) may severely limit the approved applications.
When using **category 3G or 3D accessories**, the are of application for the probe is limited to **Zone 2 or Zone 22**. Therefore be sure to note the type plates for all add-on parts. Particularly pay attention to the ignition protection markings and all hazard warnings in this manual.

DANGER

Adiabatic compression during gas blowback (explosion hazard)!

Adiabatic compression may cause high gas temperatures and must be checked by the user.
Gas blowback may result in high gas temperatures due to adiabatic compression. This can cause flammable gases to ignite spontaneously.

a) Blowback of explosive atmosphere / gases is prohibited.

b) Flammable atmosphere / gases (non-explosive) may only be blown back with nitrogen (inert gas).

DANGER

Electrical voltage

Electrocution hazard.

a) Disconnect the device from power supply.

b) Make sure that the equipment cannot be reconnected to mains unintentionally.

c) The device must be opened by trained staff only.

d) Regard correct mains voltage.

DANGER

Toxic, corrosive gas/condensate

Sample gas/condensate may be hazardous to health.

a) If necessary, ensure a safe gas/condensate discharge.

b) Always disconnect the gas supply when performing maintenance or repairs.

c) Protect yourself from toxic/corrosive gasses/condensate when performing maintenance. Wear appropriate protective equipment.

DANGER

Explosion hazard

Life and explosion risk may result from gas leakage due to improper use.

a) Use the devices only as described in this manual.

b) Regard the process conditions.

c) Check tubes and hoses for leakage.

DANGER

Use in explosive areas
Flammable gasses and dust could ignite or explode. Avoid the following hazard sources:
Sparking!
Protect the equipment from external blows.
Flame propagation!
If the process holds a risk of flame propagation, install a flame arrestor.
Dust:
If possible, take the electrical components which must be opened for repair to a dust-free room. If unable to do so, prevent dust from entering the housing.
Ignition of dust layers!
When using the device in a dusty environment, routinely clean dust from all components. Also remove layers of dust in inaccessible areas.

DANGER

Dangerous electrostatic charge (explosion hazard)

Incendive electrostatic charges may occur when cleaning plastic housing parts and decals (e.g. with a dry cloth or compressed air). The sparks this produces could ignite flammable, explosive atmospheres.
Always clean plastic housing parts and decals **with a damp cloth**!

DANGER

Explosion hazard due to high liquid temperatures

Hot steam and hot sample gas cause in a high probe surface temperature. The highest fluid temperature is approximately the maximum probe surface temperature.

a) Always ensure a safety clearance of at least 20 K between the fluid temperature (steam, sample gas) and ignition temperature of explosive atmosphere (by measuring and monitoring the temperature).

b) Also be sure to stay well below the smouldering temperatures of dust.

c) Observe the relevant requirements in standards regarding the max. permissible surface temperature and ignition temperature of explosive atmosphere.

3 Transport and storage

Only transport the product inside the original packaging or a suitable alternative.

The equipment must be protected from moisture and heat when not in use. They must be stored in a covered, dry and dust-free room at a temperature between -20 °C to 50 °C (-4 °F to 122 °F).

4 Installation and connection

4.1 Installation site requirements

Sample gas probes are intended for flange mounting.

- Installation site and installation position are determined based on requirements specific to the application.
- If necessary, the connection piece should be slightly tilted toward the centre of the channel.
- The installation site should be protected from the weather.
- In addition, adequate and safe access for installation and future maintenance work should be provided. Particularly follow the uninstalled size of the probe tube!

If the probe is transported to the installation site in pieces, it will first need to be assembled.

4.2 Installation

DANGER

Danger to life and explosion during installation and maintenance

The unit must not be worked on (assembly, installation, maintenance) in explosive atmospheres.

DANGER

Explosion hazard

When used in explosive areas
Flammable gasses and dust could ignite or explode.
Never operate the gas probe outside the specifications. Extracting gases or gas mixtures which are also explosive in the absence of air is prohibited.

DANGER

Explosion hazard due to ignition of dust

When using the device in a dusty environment, routinely clean dust from all components.
The ignition temperature resp. smouldering temperature of flammable dusts resp. dust layers present must be considerably higher than the maximum surface temperature of the device (observe applicable standards and statutory regulations).
If possible, take the electrical components which must be opened for repair to a dust-free room. If unable to do so, prevent dust from entering the housing.

DANGER

Explosion hazard due to flame propagation

Severe injuries and damage to the system
If the process holds a risk of flame propagation, install a flame arrestor.

DANGER

Dangerous electrostatic charge (explosion hazard)

Incendive electrostatic charges may occur when cleaning plastic housing parts and decals (e.g. with a dry cloth or compressed air). The sparks this produces could ignite flammable, explosive atmospheres.
Always clean plastic housing parts and decals **with a damp cloth**!

4.3 Installing the upstream filter

The upstream filter, if necessary with matching extension, must be screwed in. The probe is then attached to the mating flange using the included seals and screws.

4.4 Connecting the Gas Line

The sample gas line must be carefully and properly connected using a suitable fitting.

This table provides an overview of the sample gas probe connections:

	Probe GAS 222	Reservoir PAV01	Ball valve pneumatic drive	Control valve 3/2-way solenoid valve
Connecting flange [1]	DN65/PN6/ DN3“-150 [2]			
Sample gas inlet	G3/4			
Sample gas outlet	NPT 1/4			
Blowback connection	G3/8			
Test gas connection [1]	Tube Ø6 mm Tube Ø1/4 [2]			
Filling port		NPT 1/4		
Condensate		G1/2		
Bypass		NPT 1/4		
Control air			G1/8	G1/4 NPT 1/4

Tab. 1: Gas Probe Connections (Varies by Model)

[1] Varies by version.

[2] Only GAS 222.xx ANSI and GAS 222.xx AMEX

WARNING

Gas emanation

Sample gas can be harmful to the health!
Check the lines for leaks.

4.4.1 Blowback Connection

Without accessories installed for the blowback device, the blowback connection comes with a sealed G3/8 screw-in connection. If you require blowback, you will need to undo this screw-in connection and ensure the blowback line is connected properly and tight.

DANGER

Toxic, corrosive gasses

Explosive or toxic gases can develop due to a leaking or open blowback connection.

4.4.2 Connecting the calibrating gas line (optional)

Connecting the calibrating gas line requires a Ø6 mm or Ø1/4” pipe fitting.

If the calibrating gas connection was ordered with check valve, a Ø6 mm or Ø1/4” pipe can be connected directly to the check valve.

4.5 Connecting the Blowback and Pressure Vessel (Optional)

The air lines must be connected carefully and properly, using suitable fittings.

If the probe is equipped with pressure vessel for efficient blowback (optional), a manual shut-off valve (ball valve) must be installed in the air supply, immediately upstream from the pressure vessel.

On probes used to sample flammable gas, nitrogen (inert gas) must be used for blowback. Blowback of explosive gases is prohibited.

NOTICE

The operating pressure of the compressed air (inert gas) required for blowback must always be higher than the process pressure.
Required pressure differential min. 3 bar (44 psi).

DANGER

Broken pressure vessel

Gas leak, danger due to flying parts.
Maximum operating pressure of the pressure vessel 10 bar (145 psi)!
The operating pressure reduces based on the operating voltage (see solenoid valve type plate).

DANGER

Adiabatic compression during gas blowback (explosion hazard)!

Adiabatic compression may cause high gas temperatures and must be checked by the user.
Gas blowback may result in high gas temperatures due to adiabatic compression. This can cause flammable gases to ignite spontaneously.

a) Blowback of explosive atmosphere / gases is prohibited.

b) Flammable atmosphere / gases (non-explosive) may only be blown back with nitrogen (inert gas).

4.6 Electrical Connections

DANGER

Explosion hazard due to absence of potential equalisation

The device must be connected to potential equalisation (earthed) at the designated points.
Please observe the local regulations and guidelines.

CAUTION

Wrong mains voltage

Wrong mains voltage may damage the device.
Regard the correct mains voltage as given on the type plate.

Atex valves only:

DANGER

Explosion hazard when opening the solenoid valve housing

The solenoid valve is a closed system. It must not be removed!

A fuse suitable for the rated current (max. 3 x Ib per IEC 60127-2-1) or a protective motor switch with short circuit and fast thermal response (set for rated current) must be connected upstream from each magnet to prevent short-circuits.

- For magnets with a very low rated current, a fuse of the lowest current value under the IEC standard will suffice. This fuse must be connected separately, upstream.
- The rated fuse voltage must be equal to or greater than the specified nominal voltage (U_N+10 %) of the magnet. The fuse rating is specified in the type plate of the solenoid valve.
- The limiting breaking capacity of the fuse element must be equivalent to or greater than the maximum short-circuit current expected at the installation site (typically 1500 A).

4.6.1 Heated Pressure Vessel (Optional)

A heated blowback vessel may optionally be used for blowback. Heated via self-regulating PTC heating cartridge to protect against frost.

The electrical connection (mains connection 115/230 V AC) uses a cubic plug as per DIN 43650. Please refer to the terminal diagram at the end for the connection.

- Only use cables with a temperature resistance of > 100 °C to connect to power.
- Make sure the connecting cable has sufficient strain relief (match cable diameter to the seal on the socket).
- When connecting, also observe the applicable Ex protection regulations and general warnings in these operating instructions.

CAUTION

Equipment damage

Cables damaged
Do not damage the cable during installation. Install a strain relief for the cable connection. Secure the cable against twisting and loosening. Please note the temperature resistance of the cables (> 100 °C/212 °F).

DANGER

Adiabatic compression during gas blowback (explosion hazard)!

Adiabatic compression may cause high gas temperatures and must be checked by the user.
Gas blowback may result in high gas temperatures due to adiabatic compression. This can cause flammable gases to ignite spontaneously.

a) Blowback of explosive atmosphere / gases is prohibited.

b) Flammable atmosphere / gases (non-explosive) may only be blown back with nitrogen (inert gas).

DANGER

When used in explosive areas:

Application limitations
Heated pressure vessels suitable for use in Ex areas bear an **ignition protection mark** in the type plate. These pressure vessels are only suitable for **use in Zone 2 (equipment category 3G)**.

5 Operation and Control

NOTICE

The device must not be operated beyond its specifications.

5.1 Before Start-Up

Before starting the device, verify

- the hose- and electrical connections are not damaged and correct installed.
- no parts of the gas probe have been removed.
- the safety and monitoring devices are installed and functional.
- the gas inlet and outlet of the gas probe are open.
- ambient parameters are met.
- the performance specifications in the type plate are met.
- voltage and frequency in the type plate match the mains values.
- all connection cables are installed without strain.
- precautions have been taken.
- cable glands are sealed properly.
- the earth is proper and functional.

When used in Ex areas, also verify the probe and all add-on parts are suitable for use (observe type plates and ignition protection markings) and compliance with applicable Ex regulations.

6 Maintenance

During maintenance, remember:

- The equipment must be maintained by a professional familiar with the safety requirements and risks.
- Only perform maintenance work described in these operating and installation instructions.
- When performing maintenance of any type, observe the respective safety and operation regulations.

DANGER

Danger to life and explosion during installation and maintenance

The unit must not be worked on (assembly, installation, maintenance) in explosive atmospheres.

DANGER

Electrical voltage

Electrocution hazard.

a) Disconnect the device from power supply.

b) Make sure that the equipment cannot be reconnected to mains unintentionally.

c) The device must be opened by trained staff only.

d) Regard correct mains voltage.

DANGER

Toxic, corrosive gases

The measuring gas led through the equipment can be hazardous when breathing or touching it.

a) Check tightness of the measuring system before putting it into operation.

b) Take care that harmful gases are exhausted to a save place.

c) Before maintenance turn off the gas supply and make sure that it cannot be turned on unintentionally.

d) Protect yourself during maintenance against toxic / corrosive gases. Use suitable protective equipment.

CAUTION

Hot surface

Risk of burns
Depending on the operating parameters, the housing temperature may reach over 100 °C during operation.
Allow the unit to cool down before performing maintenance.

DANGER

Explosion hazard due to ignition of dust

When using the device in a dusty environment, routinely clean dust from all components.
The ignition temperature resp. smouldering temperature of flammable dusts resp. dust layers present must be considerably higher than the maximum surface temperature of the device (observe applicable standards and statutory regulations).
If possible, take the electrical components which must be opened for repair to a dust-free room. If unable to do so, prevent dust from entering the housing.

6.1 Maintaining the Filter Element

The probes feature a particle filter which needs to be changed as it becomes dirty.

To do so, disconnect the voltage supply and if applicable close the shut-off valve to the process or switch off the process.

CAUTION! Do not damage the rear filter seat.

NOTICE

The **stainless steel filter elements** can be cleaned with an ultrasonic bath and reused several times; in this case always use new seals on the filter and handle plug.

DANGER

Toxic, corrosive gases

The measuring gas led through the equipment can be hazardous when breathing or touching it.

a) Check tightness of the measuring system before putting it into operation.

b) Take care that harmful gases are exhausted to a save place.

c) Before maintenance turn off the gas supply and make sure that it cannot be turned on unintentionally.

d) Protect yourself during maintenance against toxic / corrosive gases. Use suitable protective equipment.

DANGER

Explosion hazard due to high liquid temperatures

Hot steam and hot sample gas cause in a high probe surface temperature. The highest fluid temperature is approximately the maximum probe surface temperature.

a) Always ensure a safety clearance of at least 20 K between the fluid temperature (steam, sample gas) and ignition temperature of explosive atmosphere (by measuring and monitoring the temperature).

b) Also be sure to stay well below the smouldering temperatures of dust.

c) Observe the relevant requirements in standards regarding the max. permissible surface temperature and ignition temperature of explosive atmosphere.

6.1.1 Replacing the upstream filter

The probes are equipped with an upstream filter which is always inside the process stream. The filter is suitable for blowback with compressed air (inert gas), i.e. blowing air (inert gas) through the filter from the inside to the outside to remove adhering particles. When sampling flammable gases, nitrogen (inert gas) must be used for blowback. Blowback of explosive gases is prohibited.

The effectiveness of cleaning a filter within a process is directly influenced by the available airflow (amount of gas). We therefore recommend using a pressure vessel directly on the probe.

With sufficient upstream filter blowback (within the process stream) the probes are maintenance-free. However, due to process conditions the filter may clog over time. In this case the filter element will need to be replaced.

Proceed as follows:

- Slightly push in the handle at the back of the probe and turn 90° (handle must then be horizontal) and remove.
- Screw the dirty filter element out of the handle.
- Check the sealing faces on the handle, replace O-rings, then install the filter element and new seal. (The spare filter includes O-rings and seals).
- Then insert the handle with the new or cleaned filter, push in slightly and turn 90° (handle must then be vertical). Pull on the handle to verify the filter element is firmly seated.

NOTICE

The weather hood can only be closed again when the handle is completely vertical. In order to do so, loosen the hood from the locking supports by lifting slightly and then fold down. Ensure that the hood lock clicks into place correctly.

Condensate inside the pressure vessel

Depending on the installation site and application conditions a small amount of condensate may form inside the blowback air pressure vessel. Open the drain screw at the bottom of the vessel and drain the condensate at least once a year.

If the probe needs to be serviced more frequently due to operating conditions, we recommend also draining the condensate at these intervals.

CAUTION **High pressure**

Pressure vessel under pressure.
Before opening the condensate drain, close the air supply to the blowback control and drain the vessel by manual blowback.
Pressing the main switch for the blowback control to interrupt the voltage supply.

6.2 Blowback of the in-situ filter (within the process stream)

DANGER **Adiabatic compression during gas blowback (explosion hazard)!**

Adiabatic compression may cause high gas temperatures and must be checked by the user.
Gas blowback may result in high gas temperatures due to adiabatic compression. This can cause flammable gases to ignite spontaneously.

a) Blowback of explosive atmosphere / gases is prohibited.

b) Flammable atmosphere / gases (non-explosive) may only be blown back with nitrogen (inert gas).

Be sure to use filtered air with a minimum rating of PNEUROP / ISO Class 4 for blowback:

Class	Particles / m³ Particle size: (1 to 5) µm	Pressure dew point [°C]	Residual oil content [mg / m³]
4	**to 1000** (no particles ≥ 15 µm)	≤ 3	≤ 5

6.2.1 Manual Blowback (Without Blowback Control)

The shut-off valve in the air supply (inert gas supply) to the pressure vessel must be open. The optional pressure gauge on the pressure vessel shows the current operating pressure.

– To blowback, first close the shut-off valve in the gas probe (handle below the probe/weather hood).
– Then **abruptly** open the ball valve inside the connecting line from the pressure vessel to the probe until the display on the pressure gauge has dropped to the lowest reading.
– After blowback, close the ball valve and open the shut-off valve in the probe.

6.2.2 Automatic Blowback (External Blowback Control)

For automatic blowback, the shut-off valve in the probe with must have a pneumatic control (optional). The control unit for the system is designed for sequential valve control, i.e.:

1. Close the shut-off valve in the probe using the pneumatic control.
2. Open the solenoid valve between the pressure vessel and probe for approx. 10 seconds.
3. Open the shut-off valve in the probe.

Blowback can also be set as a closed process at intervals ranging from several minutes to hours or even days based on requirements.

6.3 Maintenance Schedule

NOTICE

When using the probe in explosive areas the maintenance schedule must be observed!

Maintenance schedule for normal ambient conditions:

Component	Interval in operating hours	Work to be performed	To be performed by
Entire probe	every 8000 h	– Check gas connections – Proper function, dirt. If damaged, replace or have repaired by Bühler.	Operator
Entire probe	based on dust level (layer must be < 3 mm)	– Remove dust.	Operator
Filter	every 8,000 h	– Check dirt level of filter.	Operator
Seals	every 8,000 h	– Replace O-rings. – Replace seals after every filter change.	Operator
Entire probe	after 20,000 h or 3 years	Inspection by Bühler	Service technician/Bühler

7 Service and repair

This chapter contains information on troubleshooting and correction should an error occur during operation.

Repairs to the unit must be performed by Bühler authorised personnel.

Please contact our Service Department with any questions:

Tel.: +49-(0)2102-498955 or your agent

If the equipment is not functioning properly after correcting any malfunctions and switching on the power, it must be inspected by the manufacturer. Please send the equipment inside suitable packaging to:

Bühler Technologies GmbH

- Reparatur/Service -

Harkortstraße 29

40880 Ratingen

Germany

Please also attach the completed and signed RMA decontamination statement to the packaging. We will otherwise be unable to process your repair order.

You will find the form in the appendix of these instructions, or simply request it by e-mail:

service@buehler-technologies.com.

7.1 Troubleshooting

CAUTION

Risk due to defective device

Personal injury or damage to property

a) Switch off the device and disconnect it from the mains.

b) Repair the fault immediately. The device should not be turned on again before elimination of the failure.

Problem / Malfunction	Possible cause	Action
No or reduced gas flow	– Filter element clogged	– Clean or replace filter element
	– Gas circuit clogged	– Clean sampling tube
	– Ball valve closed	– Open ball valve
	– Blowback (optional) not responding	– Check compressed air supply
		– Check solenoid valve, check pneumatic control

Tab. 2: Troubleshooting

7.2 Spare Parts and Accessories

Please also specify the model and serial number when ordering parts.

Upgrade and expansion parts can be found in our catalog.

Available spare parts:

Item no.	Description
90 090 79	Flange seal DN65 PN6
46 222 351 5	O-ring kit for filter element and probe, material: Viton/Cu
	Please refer to the accessories data sheet in the appendix for filter elements

8 Disposal

The applicable national laws must be observed when disposing of the products. Disposal must not result in a danger to health and environment.

The crossed out wheelie bin symbol on Bühler Technologies GmbH electrical and electronic products indicates special disposal notices within the European Union (EU).

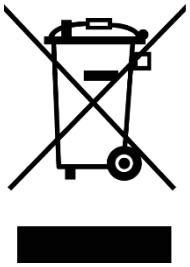

The crossed out wheelie bin symbol indicates the electric and electronic products bearing the symbol must be disposed of separate from household waste. They must be properly disposed of as waste electrical and electronic equipment.

Bühler Technologies GmbH will gladly dispose of your device bearing this mark. Please send your device to the address below for this purpose.

We are obligated by law to protect our employees from hazards posed by contaminated devices. Therefore please understand that we can only dispose of your waste equipment if the device is free from any aggressive, corrosive or other operating fluids dangerous to health or environment. **Please complete the "RMA Form and Decontamination Statement", available on our website, for every waste electrical and electronic equipment. The form must be applied to the packaging so it is visible from the outside.**

Please return waste electrical and electronic equipment to the following address:

Bühler Technologies GmbH
WEEE
Harkortstr. 29
40880 Ratingen
Germany

Please also observe data protection regulations and remember you are personally responsible for the returned waste equipment not bearing any personal data. Therefore please be sure to delete your personal data before returning your waste equipment.

9 Appendices

9.1 Technical Data

Gas Probe Technical Data		
Operating temperature:	max. 200 °C	
Ambient temperature without accessories:	-20 to +80 °C	
Ambient temperature for accessories:	**Component**	**Ambient temperature range**
	Compressed air valve:	-10 °C < T_{amb} < +55 °C
Medium temperature (blowback)	**Component**	**Medium temperature range**
	Compressed air valve:	-10 °C to +80 °C
Max. operating pressure:	6 bar	
Parts in contact with media:	Flange: 1.4571 Seals: Graphite/1.4404 and see filter	

9.2 Flow chart

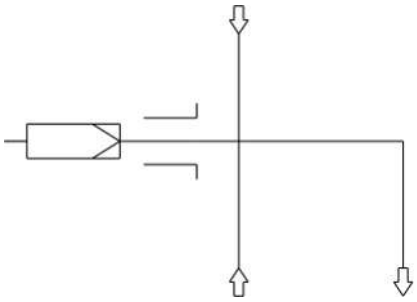

9.3 Dimensions

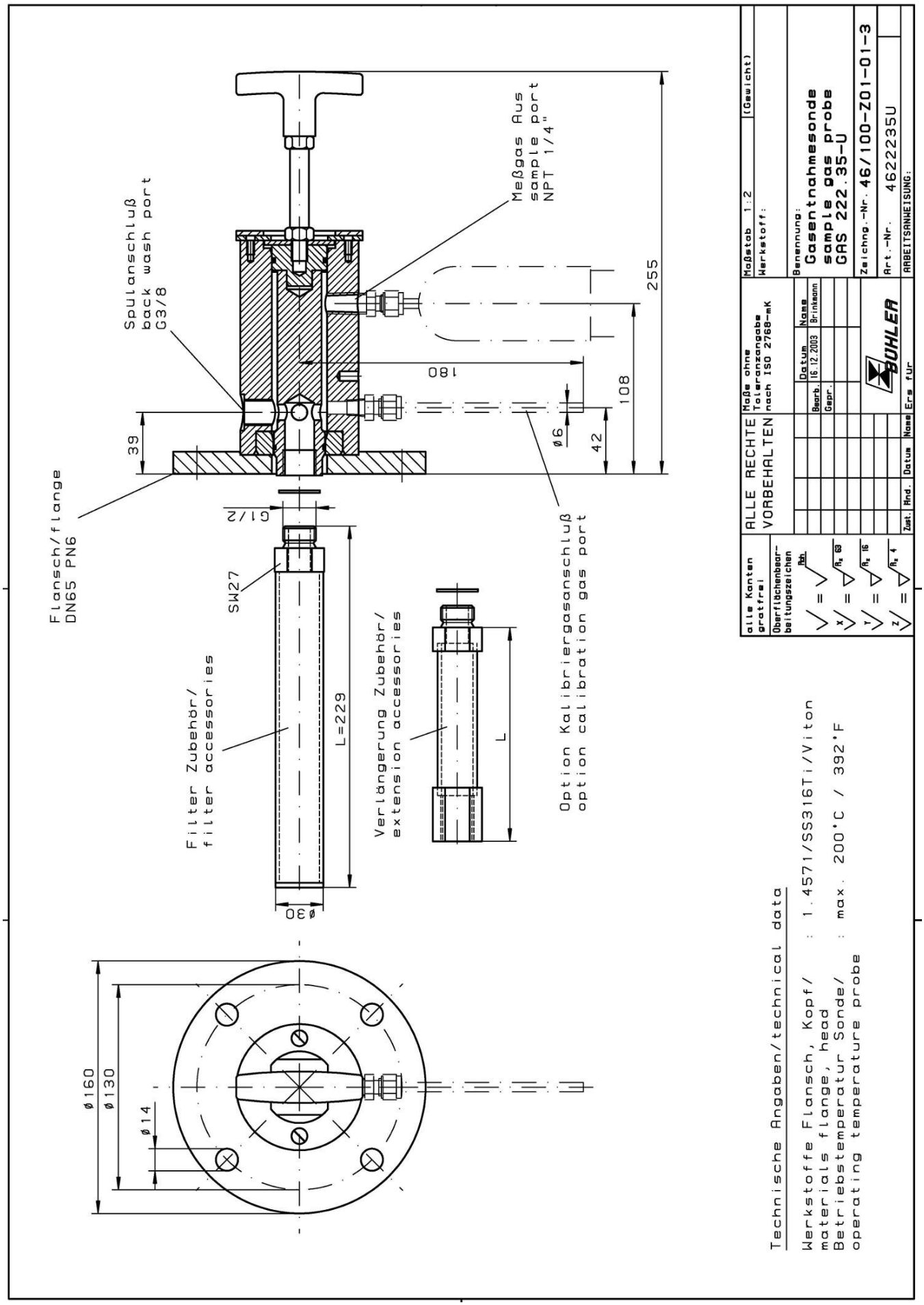

9.4 Connection diagram heated pressure vessel

Heater
Operating voltage
115-230 V AC 200 W

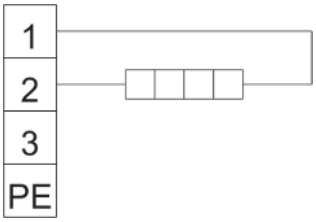

9.5 User book (Please make copies)

Maintained on	Unit no.	Operating hours	Remarks	Signature

10 Attached Documents

- Declaration of Conformity KX460020
- Manufacturer Declaration HX460001
- Accessories Data Sheet 461099
- RMA - Decontamination Statement

EU-Konformitätserklärung
EU-declaration of conformity

Hiermit erklärt Bühler Technologies GmbH, dass die nachfolgenden Produkte den wesentlichen Anforderungen der Richtlinie

Herewith declares Bühler Technologies GmbH that the following products correspond to the essential requirements of Directive

2014/35/EU
(Niederspannungsrichtlinie / *low voltage directive*)

in ihrer aktuellen Fassung entsprechen.

in its actual version.

Folgende Richtlinien wurden berücksichtigt:

The following directives were regarded:

2014/30/EU (EMV/EMC)

Produkt / products: Gasentnahmesonden mit Rückspülbehälter / *Sample gas probe with blowback vessel*

Typ / type: GAS 222.10, GAS 222.11, GAS 222.20 DH, GAS 222.30, GAS 222.35-U

Die Betriebsmittel dieser Baureihe sind zum Einbau in Gasanalysesystemen bestimmt. Sie gehören zu den wichtigsten Bauteilen eines Gasaufbereitungssystems.
The equipment of this series is designed for installation in gas analysing systems. They are very important components in a sample conditioning system.

Das oben beschriebene Produkt der Erklärung erfüllt die einschlägigen Harmonisierungsrechtsvorschriften der Union:
The object of the declaration described above is in conformity with the relevant Union harmonisation legislation:

EN 80079-36
EN 80079-37
EN 61326-1:2013
EN 1127-1:2019
EN 61010-1:2010/A1:2019/AC:2019-04

Die alleinige Verantwortung für die Ausstellung dieser Konformitätserklärung trägt der Hersteller.
This declaration of conformity is issued under the sole responsibility of the manufacturer.

Dokumentationsverantwortlicher für diese Konformitätserklärung ist Herr Stefan Eschweiler mit Anschrift am Firmensitz.
The person authorized to compile the technical file is Mr. Stefan Eschweiler located at the company's address.

Ratingen, den 17.02.2023

Stefan Eschweiler
Geschäftsführer – *Managing Director*

Frank Pospiech
Geschäftsführer – *Managing Director*

KX 46 0020

Bühler Technologies GmbH, Harkortstr. 29, D-40880 Ratingen,
Tel. +49 (0) 21 02 / 49 89-0, Fax. +49 (0) 21 02 / 49 89-20
Internet: www.buehler-technologies.com

UK Declaration of Conformity

The manufacturer Bühler Technologies GmbH declares, under the sole responsibility, that the product complies with the requirements of the following UK legislation:

Electrical Equipment Safety Regulations 2016

The following legislation were regarded:

Electromagnetic Compatibility Regulations 2016

Product:	Sample gas probe with blowback vessel
Types:	GAS 222.10
	GAS 222.11
	GAS 222.20 DH
	GAS 222.30
	GAS 222.35-U

The equipment of this series is designed for installation in gas analysing systems. They are very important components in a sample conditioning system.

The object of the declaration described above is in conformity with the relevant designated standards:

EN 61010-1:2010/A1:2019/AC:2019-04
EN 80079-36
EN 80079-37
EN 61326-1:2013
EN 1127-1:2019

Ratingen in Germany, 17.02.2023

Stefan Eschweiler
Managing Director

Frank Pospiech
Managing Director

Bühler Technologies GmbH, Harkortstr. 29, D-40880 Ratingen,
Tel. +49 (0) 21 02 / 49 89-0, Fax. +49 (0) 21 02 / 49 89-20
Internet: www.buehler-technologies.com

Herstellererklärung
Manufacture Declaration

Hiermit erklärt Bühler Technologies GmbH, dass die nachfolgenden Produkte den wesentlichen Anforderungen der Richtlinie

Herewith declares Bühler Technologies GmbH that the following products correspond to the essential requirements of Directive

2014/34/EU
(Atex)

über Explosionsschutz in ihrer aktuellen Fassung entsprechen.

about explosive atmospheres in its actual version.

Produkt / products: Messgassonde / *sample gas probe*
Typ / type: GAS 222.xx, 10, 11, 20 DH, 30, 35-U

Gasentnahmesonden sind zum Einbau in Gasanalysesystemen bestimmt.
Durch die Gasentnahmesonden **GAS 222.xx** können nichtbrennbare Gase und brennbare Gase (die im Normalbetrieb gelegentlich explosiv sein können (Zone 1) geleitet werden. Das Rückspülen explosiver Gase ist nicht gestattet. Das Rückspülen brennbarer Gase darf nur mit Inertgas erfolgen. Die Sonden dürfen nur durch Fachpersonal installiert werden; die einschlägigen Sicherheitsvorschriften sind zwingend zu beachten. Die Grundversion der Sonden ist für den Einsatz in explosionsgefährdeten Bereichen der **Zone 1 oder Zone 21** geeignet. Je nach gewähltem Zubehör (z.B. Anbauteile wie Magnetventile, beheizter Rückspülbehälter...) kann der zugelassene Einsatzbereich stark eingeschränkt sein. Bei Verwendung von **Kategorie 3G oder 3D Zubehör** ist der Einsatzbereich der Sonden auf die **Zone 2 oder Zone 22** beschränkt. Beachten Sie daher unbedingt die Typenschilder aller Anbauteile (Insbesondere die Zündschutzkennzeichnung und die Hinweise in den Bedienungsanleitungen.
Sample gas probes are intended for installation in gas-analysis systems.
*Inflammable gases and flammable gases (only temporary explosive in normal operation; zone 1) can led through the sample gas probes. Blow back to explosive gas is not allowed. Blowback of flammable gas is only allowed with inert gas. Sample gas probes have to be installed by trained personnel. All safety regulations have to be fulfilled. All basic versions of the sample gas probes can be used in **zone 1** (explosive gas atmosphere) or in **zone 21** (explosive dust atmosphere). Depending on the accessories, the range of use may be restricted. Sample gas probes with **category 3G or 3D** accessories (e.g. magnetic valve, blowback vessel...) must be used only in **zone 2 or zone 22**. Therefore note the Ex-designation on the type plates of the accessories. Note also all indications in the instruction manuals.*

Das oben beschriebene Produkt der Erklärung erfüllt die einschlägigen Harmonisierungsrechtsvorschriften der Union:
The object of the declaration described above is in conformity with the relevant Union harmonisation legislation:

EN ISO 80079-36:2016 **EN ISO 80079-37:2016** **EN 1127-1:2019**

Die alleinige Verantwortung für die Ausstellung dieser Herstellererklärung trägt der Hersteller.
This manufacture declaration issued under the sole responsibility of the manufacturer.

Dokumentationsverantwortlicher für diese Herstellererklärung ist Herr Stefan Eschweiler mit Anschrift am Firmensitz.
The person authorised to compile the technical file is Mr. Stefan Eschweiler located at the company's address.

Ratingen, den 01.11.2022

Stefan Eschweiler
Geschäftsführer – *Managing Director*

Frank Pospiech
Geschäftsführer – *Managing Director*

Bühler Technologies GmbH, Harkortstr. 29, D-40880 Ratingen,
Tel. +49 (0) 21 02 / 49 89-0, Fax. +49 (0) 21 02 / 49 89-20
Internet: www.buehler-technologies.com

Manufacturer Declaration

Herewith Bühler Technologies GmbH declares that the following products are not „equipment" for the purpose of legislation **Equipment and Protective Systems Intended for Use in Potentially Explosive Atmospheres Regulations 2016** respectively, and therefore are not labelled with the UKCA mark.

Product: Sample gas probe
Types: GAS 222.xx, 10, 11, 20 DH, 30, 35-U

This declaration is valid for all devices manufactured in accordance with the manufacturing documents deposited with the manufacturer – which form an integral part of this declaration.

Sample gas probes are intended for installation in gas-analysis systems.
Inflammable gases and flammable gases (only temporary explosive in normal operation; zone 1) can led through the sample gas probes. Blow back to explosive gas is not allowed. Blowback of flammable gas is only allowed with inert gas. Sample gas probes have to be installed by trained personnel. All safety regulations have to be fulfilled. All basic versions of the sample gas probes can be used in zone 1 (explosive gas atmosphere) or in zone 21 (explosive dust atmosphere). Depending on the accessories, the range of use may be restricted. Sample gas probes with category 3G or 3D accessories (e.g. magnetic valve, blowback vessel...) must be used only in zone 2 or zone 22. Therefore note the Ex-designation on the type plates of the accessories. Note also all indications in the instruction manuals.

The object of the declaration described above is in conformity with the relevant designated standards:

EN ISO 80079-36:2016
EN 1127-1:2019

EN ISO 80079-37:2016

This declaration of manufacture is issued under the sole responsibility of the manufacturer.

Ratingen in Germany, 01.11.2022

Stefan Eschweiler
Managing Director

Frank Pospiech
Managing Director

Bühler Technologies GmbH, Harkortstr. 29, D-40880 Ratingen,
Tel. +49 (0) 21 02 / 49 89-0, Fax. +49 (0) 21 02 / 49 89-20
Internet: www.buehler-technologies.com

Accessories for
Sample Gas Probe GAS 222

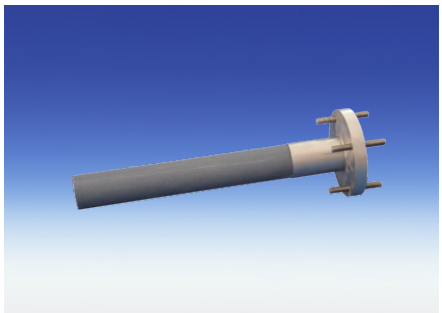

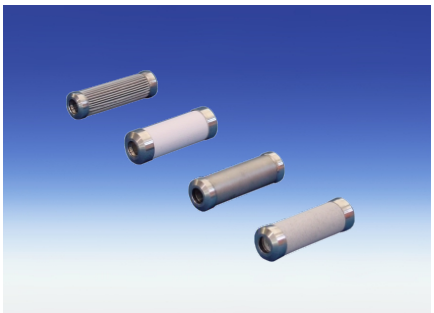

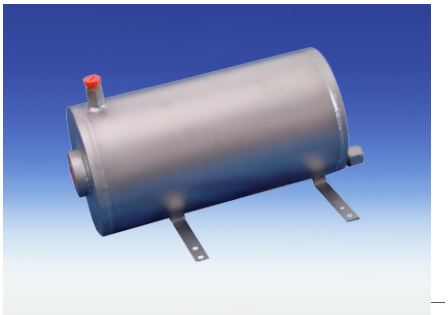

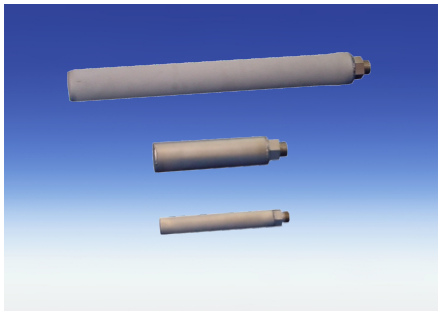

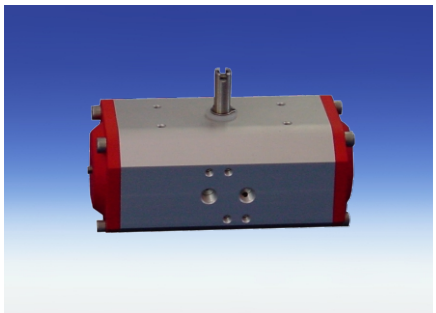

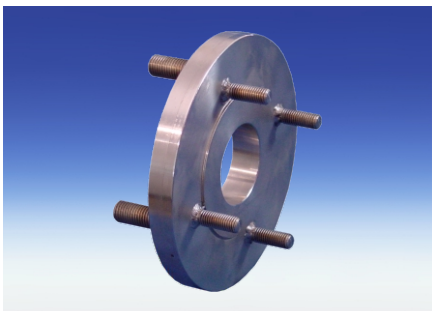

- **Sample tubes**
- **In-situ filters**
- **Extensions**

Page 2 - 4

- **Downstream filters**
- **Cal gas connections**
- **Adapter flanges**

Page 8

- **Capacitive vessel**
- **Pneumatic actuators**
- **3/2-way-solenoid valves**
- **Blowback controllers**

Page 5 - 7

For general information, see data sheet “Sample gas probes GAS 222” DE461000.

Bühler Technologies GmbH
D - 40880 Ratingen, Harkortstr. 29
Tel.: + 49 (0) 2102 / 4989-0 Fax: + 49 (0) 2102 / 4989-20
Internet: www.buehler-technologies.com
e-mail: analyse@buehler-technologies.com

Sample tubes, in-situ filters and extensions

- Various materials
- Various dimensions
- Heated or nonheated extensions

Sample tube					222.10	222.11	222.30	222.35-U	222.15	222.17	222.20	222.21	222.31	222.35	222.20 DH	222.20 Atex	222.21 Atex	222.31 Atex	222.35 Atex	222.20 Atex2	222.21 Atex2	222.31 Atex2	222.35 Atex2	222.10 ANSI	222.11 ANSI/ CSA	222.30 ANSI/ CSA	222.35-U ANSI/ CSA	222.15 ANSI/ CSA	222.17 ANSI/ CSA	222.20 ANSI/ CSA	222.21 ANSI/ CSA	222.31 ANSI/ CSA	222.35 ANSI/ CSA	222.20 DH ANSI/ CSA	222.20 AMEX	222.21 AMEX	222.31 AMEX	222.35 AMEX	Type GAS
	Material	**T max.**	**Length**	**Part No.:**																																		
01	1.4571	600°C	300 mm	462220010300	X	X			X	X	X	X			X	X	X			X	X			X	X			X	X	X	X			X	X	X		
01	1.4571	600°C	500 mm	462220010500	X	X			X	X	X	X			X	X	X			X	X			X	X			X	X	X	X			X	X	X		
01	1.4571	600°C	1000 mm	462220011000	X	X			X	X	X	X			X	X	X			X	X			X	X			X	X	X	X			X	X	X		
01	1.4571	600°C	1500 mm	462220011500	X	X			X	X	X	X			X	X	X			X	X			X	X			X	X	X	X			X	X	X		
01	1.4571	600°C	2000 mm	462220012000	X	X			X	X	X	X			X	X	X			X	X			X	X			X	X	X	X			X	X	X		
02	Ceramics / 1.4571	1600°C	0.5 m	4622200205	X	X			X	X	X	X			X	X	X			X	X			X	X			X	X	X	X			X	X	X		
02	Ceramics / 1.4571	1600°C	1.0 m	4622200210	X	X			X	X	X	X			X	X	X			X	X			X	X			X	X	X	X			X	X	X		
02	Ceramics / 1.4571	1600°C	1.5 m	4622200215	X	X			X	X	X	X			X	X	X			X	X			X	X			X	X	X	X			X	X	X		
06	Hastelloy / 1.4571	400°C	500 mm	462220060500	X	X			X	X	X	X			X	X	X			X	X			X	X			X	X	X	X			X	X	X		
06	Hastelloy / 1.4571	400°C	1000 mm	462220061000	X	X			X	X	X	X			X	X	X			X	X			X	X			X	X	X	X			X	X	X		
06	Hastelloy / 1.4571	400°C	1500 mm	462220061500	X	X			X	X	X	X			X	X	X			X	X			X	X			X	X	X	X			X	X	X		
06	Hastelloy / 1.4571	400°C	2000 mm	462220062000	X	X			X	X	X	X			X	X	X			X	X			X	X			X	X	X	X			X	X	X		
08	Inconel / 1.4571	1050°C	500 mm	462220040500	X	X			X	X	X	X			X	X	X			X	X			X	X			X	X	X	X			X	X	X		
08	Inconel / 1.4571	1050°C	1000 mm	462220041000	X	X			X	X	X	X			X	X	X			X	X			X	X			X	X	X	X			X	X	X		
08	Inconel / 1.4571	1050°C	1500 mm	462220041500	X	X			X	X	X	X			X	X	X			X	X			X	X			X	X	X	X			X	X	X		
08	Inconel / 1.4571	1050°C	2000 mm	462220042000	X	X			X	X	X	X			X	X	X			X	X			X	X			X	X	X	X			X	X	X		
08	Inconel / 1.4571	1050°C	2500 mm	462220042500	X	X			X	X	X	X			X	X	X			X	X			X	X			X	X	X	X			X	X	X		
12	1.4571	600°C	500 mm	462220160500	X	X			X	X	X	X			X	X	X			X	X			X	X			X	X	X	X			X	X	X		
12	1.4571	600°C	1000 mm	462220161000	X	X			X	X	X	X			X	X	X			X	X			X	X			X	X	X	X			X	X	X		
12	1.4571	600°C	1500 mm	462220161500	X	X			X	X	X	X			X	X	X			X	X			X	X			X	X	X	X			X	X	X		
12	1.4571	600°C	2000 mm	462220162000	X	X			X	X	X	X			X	X	X			X	X			X	X			X	X	X	X			X	X	X		
13	Kanthal / 1.4571	1400°C	up to 1 m	46222017	X	X			X	X	X	X			X					X	X			X	X			X	X	X	X			X	X	X		
	Sample tube with demister PVDF/ETFE	120°C	800 mm	46222040	X	X			X	X	X	X			X									X	X			X	X	X	X			X				
	Demister ETFE / as spare part	120°C		462220402	X	X			X	X	X	X			X									X	X			X	X	X	X			X				
	Sample tube with demister / 1.4571	400°C	300 mm	4622204203	X	X			X	X	X	X			X									X	X			X	X	X	X			X				
	Sample tube with demister / 1.4571	400°C	500 mm	4622204205	X	X			X	X	X	X			X									X	X			X	X	X	X			X				
	Sample tube with demister / 1.4571	400°C	1000 mm	4622204210	X	X			X	X	X	X			X									X	X			X	X	X	X			X				
	Demister 1.4571 / as spare part	400°C		4611004	X	X			X	X	X	X			X									X	X			X	X	X	X			X				

Sample tubes, in-situ filters and extensions

- Various materials
- Various dimensions
- Heated or nonheated extensions

In-situ filter						222.10	222.11	222.30	222.35-U	222.15	222.17	222.20	222.21	222.31	222.35	222.20 DH	222.20 Atex	222.21 Atex	222.31 Atex	222.35 Atex	222.20 Atex2	222.21 Atex2	222.31 Atex2	222.35 Atex2	222.10 ANSI	222.11 ANSI/ CSA	222.30 ANSI/ CSA	222.35-U ANSI/ CSA	222.15 ANSI/ CSA	222.17 ANSI/ CSA	222.20 ANSI/ CSA	222.21 ANSI/ CSA	222.31 ANSI/ CSA	222.35 ANSI/ CSA	222.20 DH ANSI/ CSA	222.20 AMEX	222.21 AMEX	222.31 AMEX	222.35 AMEX	Type GAS
	Material	**T max.**	**Length**	**Pore size**	**Part No.:**																																			
03	stainless steel	600°C	237 mm	5 µm	46222303		X	X					X	X				X	X			X	X			X	X					X	X				X	X		
03F	stainless steel	600°C	237 mm	0.5 µm	46222303F*		X	X					X	X				X	X			X	X			X	X					X	X				X	X		
03H	Hastelloy	600°C	237 mm	5 µm	46222303H*		X	X					X	X				X	X			X	X			X	X					X	X				X	X		
03HF	Hastelloy	600°C	237 mm	0.5 µm	46222303HF*		X	X					X	X				X	X			X	X			X	X					X	X				X	X		
031	stainless steel, with volume displacer	600°C	237 mm	5 µm	462223031		X	X					X	X				X	X			X	X			X	X					X	X				X	X		
031F	stainless steel, with volume displacer	600°C	237 mm	0.5 µm	462223031F*		X	X					X	X				X	X			X	X			X	X					X	X				X	X		
031H	Hastelloy, with volume displacer	600°C	237 mm	5 µm	462223031H*		X	X					X	X				X	X			X	X			X	X					X	X				X	X		
031HF	Hastelloy, with volume displacer	600°C	237 mm	0.5µm	462223031HF*		X	X					X	X				X	X			X	X			X	X					X	X				X	X		
04	stainless steel	600°C	538 mm	5 µm	46222304		X	X					X	X				X	X			X	X			X	X					X	X				X	X		
04F	stainless steel	600°C	538 mm	0.5 µm	46222304F*		X	X					X	X				X	X			X	X			X	X					X	X				X	X		
04H	Hastelloy	600°C	538 mm	5 µm	46222304H*		X	X					X	X				X	X			X	X			X	X					X	X				X	X		
04HF	Hastelloy	600°C	538 mm	0.5 µm	46222304HF*		X	X					X	X				X	X			X	X			X	X					X	X				X	X		
041	stainless steel, with volume displacer	600°C	538 mm	5 µm	462223041		X	X					X	X				X	X			X	X			X	X					X	X				X	X		
041F	stainless steel, with volume displacer	600°C	538 mm	0.5 µm	462223041F*		X	X					X	X				X	X			X	X			X	X					X	X				X	X		
041H	Hastelloy, with volume displacer	600°C	538 mm	5 µm	462223041H*		X	X					X	X				X	X			X	X			X	X					X	X				X	X		
041HF	Hastelloy, with volume displacer	600°C	538 mm	0.5 µm	462223041HF*		X	X					X	X				X	X			X	X			X	X					X	X				X	X		
07	Ceramics / 1.4571	1000°C[1)]	478 mm	2 µm	46222307		X	X					X	X				X	X			X	X																	
07F	Ceramics / 1.4571	1000°C[1)]	478 mm	0.3 µm	46222307F*		X	X					X	X				X	X																					
07 ANSI	Ceramics / 1.4571	1000°C[1)]	478 mm	2 µm	46222307C																					X	X					X	X				X	X		
35	stainless steel	600°C	229 mm	5 µm	46222359				X						X					X				X					X					X						X
35F	stainless steel	600°C	229 mm	0.5 µm	46222359F*				X						X					X				X					X					X						X

1) Hot gas filtration, oxidizing atmosphere max. 750 °C
Hot gas filtration, reductive atmosphere max. 600 °C

* Prices and delivery time on request

Sample tubes, in-situ filters and extensions

- Various materials
- Various dimensions
- Heated or nonheated extensions

						222.10	222.11	222.30	222.35-U	222.15	222.17	222.20	222.21	222.31	222.35	222.20 DH	222.20 Atex	222.21 Atex	222.31 Atex	222.35 Atex	222.20 Atex2	222.21 Atex2	222.31 Atex2	222.35 Atex2	222.10 ANSI	222.11 ANSI/ CSA	222.30 ANSI/ CSA	222.35-U ANSI/ CSA	222.15 ANSI/ CSA	222.17 ANSI/ CSA	222.20 ANSI/ CSA	222.21 ANSI/ CSA	222.31 ANSI/ CSA	222.35 ANSI/ CSA	222.20 DH ANSI/ CSA	222.20 AMEX	222.21 AMEX	222.31 AMEX	222.35 AMEX	**Type GAS**
Protection shield					**Part No.:**																																			
for in-situ filter 03					462223034		X	X					X	X				X	X			X	X			X	X					X	X				X	X		
for in-situ filter 04					462223044		X	X					X	X				X	X			X	X			X	X					X	X				X	X		
Extensions																																								
Typ		Material	Mains voltage	Length																																				
G3/4	nonheated	1.4571		0.2 m	4622230320200	X	X	X		X	X	X	X	X		X	X	X	X		X	X	X		X	X	X		X	X	X	X	X		X	X	X	X		
G3/4	nonheated	1.4571		0.4 m	4622230320400	X	X	X		X	X	X	X	X		X	X	X	X		X	X	X		X	X	X		X	X	X	X	X		X	X	X	X		
G3/4	nonheated	1.4571		0.5 m	4622230320500	X	X	X		X	X	X	X	X		X	X	X	X		X	X	X		X	X	X		X	X	X	X	X		X	X	X	X		
G3/4	nonheated	1.4571		0.7 m	4622230320700	X	X	X		X	X	X	X	X		X	X	X	X		X	X	X		X	X	X		X	X	X	X	X		X	X	X	X		
G3/4	nonheated	1.4571		1 m	4622230321000	X	X	X		X	X	X	X	X		X	X	X	X		X	X	X		X	X	X		X	X	X	X	X		X	X	X	X		
G3/4	nonheated	1.4571		1,2 m	4622230321200	X	X	X		X	X	X	X	X		X	X	X	X		X	X	X		X	X	X		X	X	X	X	X		X	X	X	X		
G3/4	nonheated	1.4571		1,5 m	4622230321500	X	X	X		X	X	X	X	X		X	X	X	X		X	X	X		X	X	X		X	X	X	X	X		X	X	X	X		
G3/4	nonheated	1.4571		2 m	4622230322000	X	X	X		X	X	X	X	X		X	X	X	X		X	X	X		X	X	X		X	X	X	X	X		X	X	X	X		
G1/2	nonheated	1.4571		0,25 m	4622235910250				X						X					X				X				X						X					X	
G1/2	nonheated	1.4571		0,5 m	4622235910500				X						X					X				X				X						X					X	
G1/2	nonheated	1.4571		0,7 m	4622235910700				X						X					X				X				X						X					X	
G1/2	nonheated	1.4571		1,5 m	4622235911500				X						X					X				X				X						X					X	
GF	heated*	1.4571	230V	0.5 m	462223036							X	X	X																										
GF	heated*	1.4571	230V	1 m	462223033							X	X	X																										
GF	ANSI / CSA,heated*	1.4571	115V	0.5 m	462223036C1																										X	X	X							
GF	ANSI / CSA,heated*	1.4571	115V	1 m	462223033C1																										X	X	X							
Controller for heated extension integrated into probe controller					46222292							X	X	X																	X	X	X							

* Mounting is only possible at a plain flange without G3/4 thread. Therefore a G has to be added to the part number, e.g. 4622220G.
It is not possible to add a heated extension after delivery.

Entnahmerohre / tubes

Typ	L	ø	A	SW
01	var.	12	G3/4	36
06	var.	12	G3/4	36
08	var.	21,3	G3/4	36
12	var.	20	G3/4	36
13	var.	15	G3/4	36
14	var.	18	G3/4	36

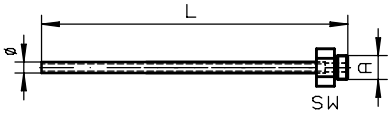

Typ	L	ø	A	SW
02-0,5	500	24	G3/4	36
02-1,0	1000	24	G3/4	36
02-1,5	1500	24	G3/4	36

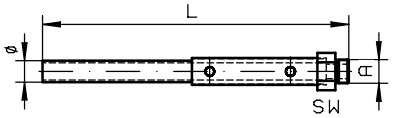

Verlängerungen / extensions

Unbeheizt / unheated

Typ	L	A	SW
G3/4	0,2-2 m	G3/4	36
G1/2	0,25-1,5m	G1/2	27

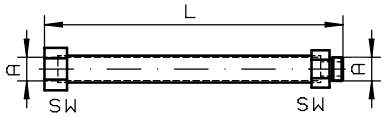

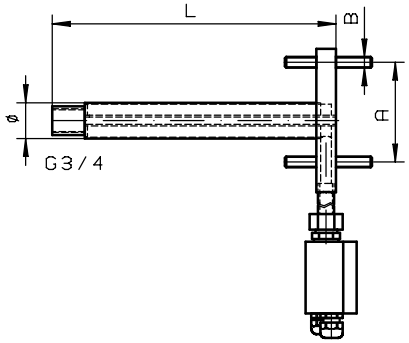

Beheizt / heated

Typ	L	ø	A	B
GF	500	40	DN65 PN6	M12
GF	1000	40	DN65 PN6	M12
GF ANSI/CSA	500	40	DN3"-150	M16
GF ANSI/CSA	1000	40	DN3"-150	M16

Eintritssfilter / in-situ filter

Typ	L	ø	A	SW
03	237	51	G3/4	36
031	237	51	G3/4	36
04	538	60	G3/4	36
041	538	60	G3/4	36
35	229	29	G1/2	27

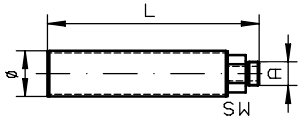

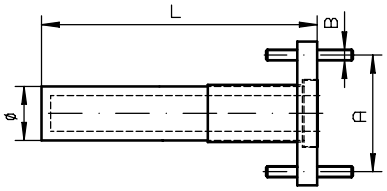

Typ	L	ø	A	B
07	500	60	DN65 PN6	M12
07 ANSI	500	60	DN3"-150	M16

Abweisblech / protection shield

Eintrittsfilter / in-situ filter 03

Eintrittsfilter / in-situ filter 04

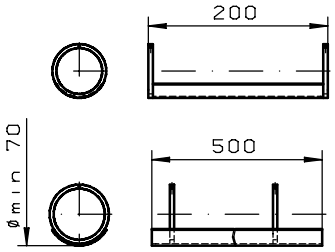

alle Kanten gratfrei	ALLE RECHTE VORBEHALTEN				Maße ohne Toleranzangabe nach ISO 2768-mK		Maßstab 1 5	(Gewicht)
Oberflächenbearbeitungszeichen							Werkstoff	
						Datum	Name	Benennung
					Bearb	21 01 2004	Brinkmann	Rohre/Filter/Verlängerungen tubes/filter/extensions GAS 222
					Gepr			
					BÜHLER			Zeichng -Nr 46/107-Z01-01-3A
	a	neu	29 09 06	Br				Art -Nr
	Zust	Änd	Datum	Name	Ers für			ARBEITSANWEISUNG

Blowback

- With ball valve or solenoid valve
- Heated or nonheated
- Manuell or automatic control

Capacitive vessel	Ambient temperature	Part No.:	222.10	222.11	222.30	222.35-U	222.15	222.17	222.20	222.21	222.31	222.35	222.20 DH	222.20 Atex	222.21 Atex	222.31 Atex	222.35 Atex	222.20 Atex2	222.21 Atex2	222.31 Atex2	222.35 Atex2	222.10 ANSI	222.11 ANSI/ CSA	222.30 ANSI/ CSA	222.35-U ANSI/ CSA	222.15 ANSI/ CSA	222.17 ANSI/ CSA	222.20 ANSI/ CSA	222.21 ANSI/ CSA	222.31 ANSI/ CSA	222.35 ANSI/ CSA	222.20 DH ANSI/ CSA	222.20 AMEX	222.21 AMEX	222.31 AMEX	222.35 AMEX	Type GAS
PAV 01		46222PAV		X	X	X				X	X	X			X	X	X		X	X	X		X	X	X				X	X	X			X	X	X	
Accessories for capacitive vessel																																					
ball valve		46222PAVKH		X	X	X				X	X	X			X	X	X		X	X	X		X	X	X				X	X	X			X	X	X	
2/2-way-MV 24VDC*	-10 ... +55°C	46222PAVMV1		X	X	X				X	X	X																									
2/2-way-MV 110V 50Hz	-10 ... +55°C	46222PAVMV2		X	X	X				X	X	X																									
2/2-way-MV 220-230V 50/60Hz	-10 ... +55°C	46222PAVMV3		X	X	X				X	X	X																									
2/2-way-MV 24VUC Atex II 2G/D EEx m II T4 IP65	-10 ... +60°C	46222PAVMV4		X	X	X									X	X	X		X	X	X																
2/2-way-MV 110VUC Atex II 2G/D EEx m II T4 IP65	-10 ... +60°C	46222PAVMV5		X	X	X									X	X	X		X	X	X																
2/2-way-MV 230VUC Atex II 2G/D EEx m II T4 IP65	-10 ... +60°C	46222PAVMV6		X	X	X									X	X	X		X	X	X																
2/2- way- AMEX 24 V/ 60 Hz Cl. I Div 2	-10 ... +55°C	46222PAVMV14																					X	X	X				X	X	X			X	X	X	
2/2- way- AMEX 120 V/ 60 Hz Cl. I Div 2	-10 ... +55°C	46222PAVMV8																					X	X	X				X	X	X			X	X	X	
2/2- way- AMEX 240 V/ 60 Hz Cl. I Div 2	-10 ... +55°C	46222PAVMV9																					X	X	X				X	X	X			X	X	X	
self regulated heating system 115/230V 50/60Hz		46222PAVHZ1		X	X	X				X	X	X											X	X	X				X	X	X						
self regulated heating system 115-230V 50/60Hz Atex 2 II 3G Ex nA IIC T3 Gc X		46222PAVHZ2																	X	X	X																
self regulated heating system 115-230V 50/60Hz Atex 2 II 3G Ex nA IIC T4 Gc X		46222PAVHZ3																	X	X	X																
self regulated heating system AMEX,115-230V,50/60 Hz, Cl. I Div 2 B,C,D,T3		46222PAVHZ4																																X	X	X	
self regulated heating system AMEX,115-230V,50/60 Hz, Cl. I Div 2 B,C,D,T4		46222PAVHZ6																																X	X	X	
support of pressurised vessel		462223502				X																			X												
Bourdon tube pressure gauge 0-10 bar		46222PAVMA		X	X	X				X	X	X			X	X	X		X	X	X		X	X	X				X	X	X			X	X	X	
Pneumatic actuators																																					
spring return, opened unpressurised		46222008		X	X					X	X				X	X			X	X			X	X					X	X				X	X		
spring return, closed unpressurised		46222030		X	X					X	X				X	X			X	X			X	X					X	X				X	X		
double action		46222009		X	X					X	X																										
limit switch		9008928		X	X					X	X																										
limit switch Atex II 2G/3D IIC T6 IP65		9008930													X	X			X	X																	
limit switch Atex II 2G/2D IIC T6 IP65		9027002													X	X			X	X																	
3/2-way-SV for controlling of pneumatic actuator																																					
24 VDC	-10 ... +55°C	46222075		X	X					X	X																										
110 V 50 Hz	-10 ... +55°C	46222076		X	X					X	X																										
230 V 50 Hz	-10 ... +55°C	46222077		X	X					X	X																										
ATEX 24 V UC II 2G/D EEx m II T4	-10 ... +60°C	46222078		X	X										X	X			X	X																	
ATEX 110 V UC II 2G/D EEx m II T4	-10 ... +60°C	46222079		X	X										X	X			X	X																	
ATEX 230 V UC II 2G/D EEx m II T4	-10 ... +60°C	46222080		X	X										X	X			X	X																	
AMEX 24 V 60 Hz, NPT1/4", Cl. I Div 2	-10 ... +55°C	46222116																					X	X					X	X				X	X		
AMEX 120 V 60 Hz, NPT1/4", Cl. I Div 2	-10 ... +55°C	46222050																					X	X					X	X				X	X		
AMEX 240 V 60 Hz, NPT1/4", Cl. I Div 2	-10 ... +55°C	46222056																					X	X					X	X				X	X		
5/2-way-SV for controlling of pneumatic actuator	-10 ... +70°C	9148000117		X	X					X	X																										
Blowback controller																																					
RSS 24 VDC, IP65		46222199		X	X	X				X	X	X																									
RSS 115/230 VAC, IP65		46222299		X	X	X				X	X	X																									
RSS-MC integrated into probe controller cabinet		46222392								X	X	X																	X	X	X						

*max. pressure 6 bar

Details:

A) Blowback

Ordering note for capacitive vessel:

For attachment to GAS 222.11 / 30 / 35-U, a support is required.

Ordering note for pneumatic actuator:

If a blowback controller is required, only actuator P/N 46222030 is possible.

We advise the installation of a position indicator switch to control the pneumatic actuator.

Integrated blowback controller in the probe controller

In addition to the stand-alone blowback controller (RRS), an integrated blowback controller is optionally available

Blowback cycle time and actual blowback time can be adjusted via the keys and menu of the controller. The blowback and manual operation will be shown on the display. The blowback controller can be programmed via the keys – manual or automatic operation is possible. Besides the status output of the controller, a blowback status signal is provided. Blowback will be usually initiated by signals coming from the main controls.

If the position indicator switch is installed, the controller will use this input for the process logic.

B) Hazardous Areas

Please note that installed accessories may change the approved category of the probe.
Follow strictly the advices given in the installation- and operation manual and regard the marking on the type plate.

Sample Gas Probe GAS 222.xx Atex		
Model	**with Accessories**	**resuting restircted area; marking**
21 Atex, 31 Atex, 35 Atex	Pressure vessel PAV 01 (Part-No. 46222PAV with accessories)	II 1D / 2GD
21 Atex, 31 Atex,	In situ filter*, ceramics (Art.-Nr.:46222307 + 46222307F)	II 1D 3G / 2GD
20 Atex , 21 Atex,	Downstream filter*, ceramic (Part-No. 46222026 + 46222026P)	II 1D 3G / 2GD
20 Atex, 21 Atex,	Sample tube (Part-No. 46222001, 462220011, 46222006, 46222004, 46222016)	II 1G / 2GD
20 Atex, 21 Atex,	Sample tube**, ceramics (Part-No. 4622200205, 4622200210, 4622200215)	II 3G / 2GD
21 Atex, 31 Atex,	Pneumatic cylinder with end switch Atex (Part-No. 46222019)	II 1GD / 2G3D

* Accessory not suitable for sampling dust with extremely low ignition energy < 3mJ.
** When gases are sampled from Zone 2, ceramic sample tube must be used only if application related or process related electrostatic charging is eliminated.

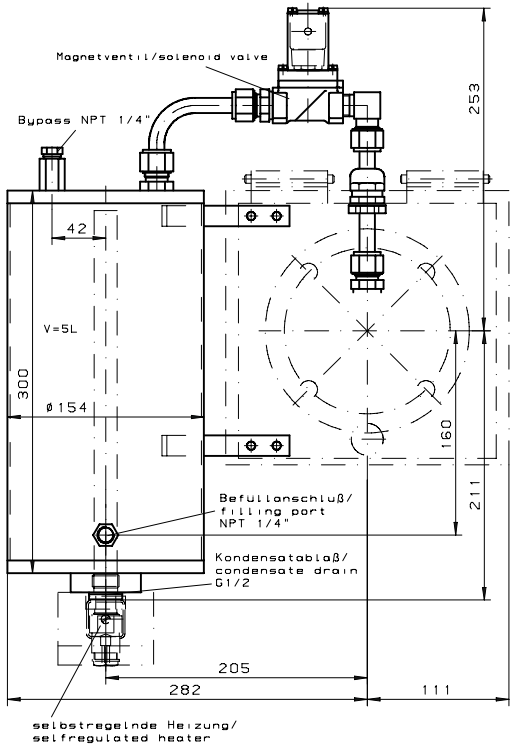

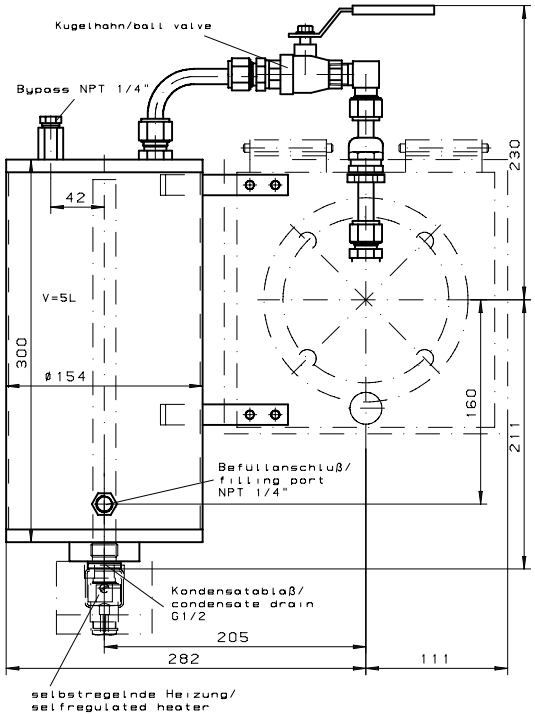

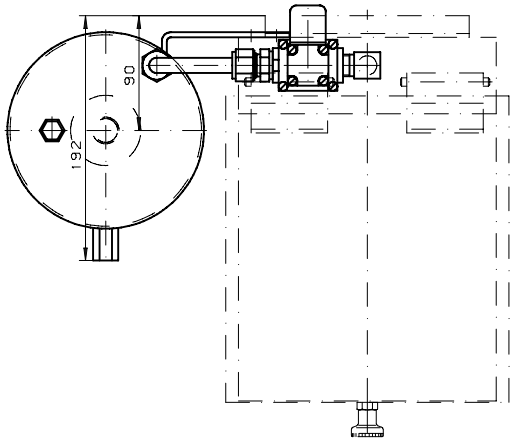

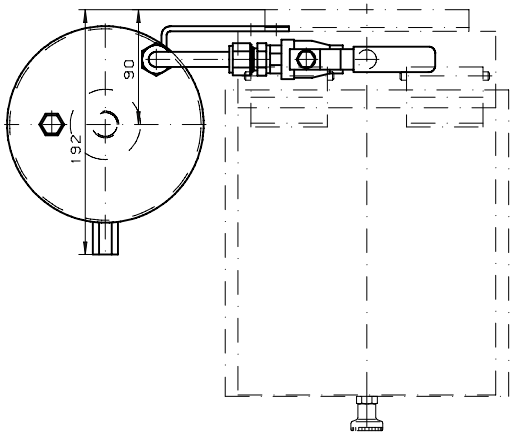

max Betriebsdruck/operating pressure 10bar
max Betriebstemperatur/operating temperature 50°C

"Änderungen nur nach Rücksprache
mit dem Atexbeauftragten zulässig"

alle Kanten gratfrei	ALLE RECHTE VORBEHALTEN	Maße ohne Toleranzangabe nach ISO 2768-mK	Maßstab 1 2,5 (Gewicht)
Oberflächenbearbeitungszeichen			Werkstoff
		Datum / Name	Benennung
		Bearb 05 07 2004 Brinkmann	Druckluftbehälter/ capacitive vessel PAV 01
		Gepr	
		BÜHLER	Zeichng -Nr 46/106-Z01-01-2
			Art -Nr
Zust / Änd / Datum / Name		Ers für	ARBEITSANWEISUNG

Downstream filter elements and further options

				222.10	222.11	222.30	222.35-U	222.15	222.17	222.20	222.21	222.31	222.35	222.20 DH	222.20 Atex	222.21 Atex	222.31 Atex	222.35 Atex	222.20 Atex2	222.21 Atex2	222.31 Atex2	222.35 Atex2	222.10 ANSI	222.11 ANSI/ CSA	222.30 ANSI/ CSA	222.35-U ANSI/ CSA	222.15 ANSI/ CSA	222.17 ANSI/ CSA	222.20 ANSI/ CSA	222.21 ANSI/ CSA	222.31 ANSI/ CSA	222.35 ANSI/ CSA	222.20 DH ANSI/ CSA	222.20 AMEX	222.21 AMEX	222.31 AMEX	222.35 AMEX	**Type GAS**
Downstream filter			**Part no.:**																																			
Material	**O-Rings**	**Pore size**																																				
Ceramics	Viton	3 µm	46222026	X	X			X	X	X	X			X	X	X			X	X			X	X			X	X	X	X			X	X	X		
Ceramics	Perfluorelastomer	3 µm	46222026P	X	X			X	X	X	X			X	X	X			X	X			X	X			X	X	X	X			X	X	X		
Sintered stainless steel	Viton	5 µm	46222010	X	X			X	X	X	X			X	X	X			X	X			X	X			X	X	X	X			X	X	X		
Sintered stainless steel	Perfluorelastomer	5 µm	46222010P	X	X			X	X	X	X			X	X	X			X	X			X	X			X	X	X	X			X	X	X		
Sintered stainless steel	Viton	0,5 µm	46222010F*	X	X			X	X	X	X			X	X	X			X	X			X	X			X	X	X	X			X	X	X		
Sintered stainless steel	Perfluorelastomer	0,5 µm	46222010FP*	X	X			X	X	X	X			X	X	X			X	X			X	X			X	X	X	X			X	X	X		
Pleated stainless steel	Viton	10 µm	46222011	X	X			X	X	X	X			X	X	X			X	X			X	X			X	X	X	X			X	X	X		
Pleated stainless steel	Perfluorelastomer	10 µm	46222011P	X	X			X	X	X	X			X	X	X			X	X			X	X			X	X	X	X			X	X	X		
Handle to hold the micro-fibreglass filter element			46222067	X	X			X	X	X	X			X									X	X			X	X	X	X			X	X	X		
Micro glass fiber with silicate binder	Viton		462220671	X	X			X	X	X	X			X									X	X			X	X	X	X			X	X	X		
Micro glass fiber with silicate binder	Perfluorelastomer		462220671P	X	X			X	X	X	X			X									X	X			X	X	X	X			X	X	X		
Closing handle with filter tube and filter wool	Viton		46222163	X	X			X	X	X	X			X									X	X			X	X	X	X			X	X	X		
Closing handle with filter tube and filter wool	Perfluorelastomer		46222163P	X	X			X	X	X	X			X									X	X			X	X	X	X			X	X	X		
Filter wool			46222167	X	X			X	X	X	X			X									X	X			X	X	X	X			X	X	X		
Set of O-rings Viton incl. grease			46222012	X	X			X	X	X	X			X	X	X			X	X			X	X			X	X	X	X			X	X	X		
Set of O-rings Perfluorelastomer incl. grease			46222024	X	X			X	X	X	X			X	X	X			X	X			X	X			X	X	X	X			X	X	X		
Further options																																						
Adapter flange ANSI 3“-150lbs			46222014	X	X	X	X	X	X	X	X	X	X	X	X	X	X	X	X	X	X	X															
Cal gas connection ø6mm			46222309	X	X	X	X	X	X	X	X	X	X	X	X	X	X	X	X	X	X	X	X	X	X	X	X	X	X	X	X	X	X	X	X	X	X	X
Cal gas connection ø6mm with check valve			46222311	X	X	X	X	X	X	X	X	X	X	X	X	X	X	X	X	X	X	X	X	X	X	X	X	X	X	X	X	X	X	X	X	X	X	X
Cal gas connection ø1/4"			46222336	X	X	X	X	X	X	X	X	X	X	X	X	X	X	X	X	X	X	X	X	X	X	X	X	X	X	X	X	X	X	X	X	X	X	X
Cal gas connection ø1/4" with check vavle			46222337	X	X	X	X	X	X	X	X	X	X	X	X	X	X	X	X	X	X	X	X	X	X	X	X	X	X	X	X	X	X	X	X	X	X	X
Fitting for sample gas port ø6mm			9008173	X	X	X	X	X	X	X	X	X	X	X	X	X	X	X	X	X	X	X	X	X	X	X	X	X	X	X	X	X	X	X	X	X	X	X
Fitting for sample gas port ø8mm			9008174	X	X	X	X	X	X	X	X	X	X	X	X	X	X	X	X	X	X	X	X	X	X	X	X	X	X	X	X	X	X	X	X	X	X	X
Fitting for back wash port ø12mm			9008369		X	X	X				X	X	X			X	X	X		X	X	X		X	X	X				X	X	X			X	X	X
Ffitting for sample gas port ø1/4"			9008584	X	X	X	X	X	X	X	X	X	X	X	X	X	X	X	X	X	X	X	X	X	X	X	X	X	X	X	X	X	X	X	X	X	X	X
Fitting for sample gas port ø3/8"			9008583	X	X	X	X	X	X	X	X	X	X	X	X	X	X	X	X	X	X	X	X	X	X	X	X	X	X	X	X	X	X	X	X	X	X	X
Fitting for back wash port ø1/2"			9028033		X	X	X				X	X	X			X	X	X		X	X	X		X	X	X				X	X	X			X	X	X
Locking screw G3/8 for backflush connection			9008084			X	X				X	X	X			X	X	X		X	X	X			X	X				X	X	X			X	X	X
Sealing ring for sealing the backflush connection with a locking screw			9009258			X	X				X	X	X			X	X	X		X	X	X			X	X				X	X	X			X	X	X
Mounting bracket with clamp ring for DN65 PN6			462220102					X																														
Mounting bracket with clamp ring for ANSI 3”-150 lbs			462220102C																								X											

* Prices and delivery time on request

RMA-Formular und Erklärung über Dekontaminierung
RMA-Form and explanation for decontamination

RMA-Nr./ RMA-No. _____

Die RMA-Nr. bekommen Sie von Ihrem Ansprechpartner im Vertrieb oder Service. Bei Rücksendung eines Altgeräts zur Entsorgung tragen Sie bitte in das Feld der RMA-Nr. "WEEE" ein./ You may obtain the RMA number from your sales or service representative. When returning an old appliance for disposal, please enter "WEEE" in the RMA number box.

Zu diesem Rücksendeschein gehört eine Dekontaminierungserklärung. Die gesetzlichen Vorschriften schreiben vor, dass Sie uns diese Dekontaminierungserklärung ausgefüllt und unterschrieben zurücksenden müssen. Bitte füllen Sie auch diese im Sinne der Gesundheit unserer Mitarbeiter vollständig aus./ This return form includes a decontamination statement. The law requires you to submit this completed and signed decontamination statement to us. Please complete the entire form, also in the interest of our employee health.

Firma/ Company

Firma/ Company	
Straße/ Street	
PLZ, Ort/ Zip, City	
Land/ Country	

Ansprechpartner/ Person in charge

Name/ Name	
Abt./ Dept.	
Tel./ Phone	
E-Mail	

Gerät/ Device	
Anzahl/ Quantity	
Auftragsnr./ Order No.	

Serien-Nr./ Serial No.	
Artikel-Nr./ Item No.	

Grund der Rücksendung/ Reason for return

- ☐ Kalibrierung/ Calibration
- ☐ Modifikation/ Modification
- ☐ Reklamation/ Claim
- ☐ Reparatur/ Repair
- ☐ Elektroaltgerät/ Waste Electrical & Electronic Equipment (WEEE)
- ☐ andere/ other

bitte spezifizieren/ please specify

Ist das Gerät möglicherweise kontaminiert?/ Could the equipment be contaminated?

☐ Nein, da das Gerät nicht mit gesundheitsgefährdenden Stoffen betrieben wurde./ No, because the device was not operated with hazardous substances.

☐ Nein, da das Gerät ordnungsgemäß gereinigt und dekontaminiert wurde./ No, because the device has been properly cleaned and decontaminated.

☐ Ja, kontaminiert mit:/ Yes, contaminated with: _____

☐	☐	☐	☐	☐	☐	☐	☐	☐
explosiv/ explosive	entzündlich/ flammable	brandfördernd/ oxidizing	komprimierte Gase/ compressed gases	ätzend/ caustic	giftig, Lebensgefahr/ poisonous, risk of death	gesundheitsgefährdend/ harmful to health	gesundheitsschädlich/ health hazard	umweltgefährdend/ environmental hazard

Bitte Sicherheitsdatenblatt beilegen!/ Please enclose safety data sheet!

Das Gerät wurde gespült mit:/ The equipment was purged with: _____

Diese Erklärung wurde korrekt und vollständig ausgefüllt und von einer dazu befugten Person unterschrieben. Der Versand der (dekontaminierten) Geräte und Komponenten erfolgt gemäß den gesetzlichen Bestimmungen.

This declaration has been filled out correctly and completely, and signed by an authorized person. The dispatch of the (decontaminated) devices and components takes place according to the legal regulations.

Falls die Ware nicht gereinigt, also kontaminiert bei uns eintrifft, muss die Firma Bühler sich vorbehalten, diese durch einen externen Dienstleister reinigen zu lassen und Ihnen dies in Rechnung zu stellen.

Should the goods not arrive clean, but contaminated, Bühler reserves the right, to comission an external service provider to clean the goods and invoice it to your account.

Firmenstempel/ Company Sign

Datum/ Date _____

rechtsverbindliche Unterschrift/ Legally binding signature

Bühler Technologies GmbH, Harkortstr. 29, D-40880 Ratingen
Tel. +49 (0) 21 02 / 49 89-0, Fax: +49 (0) 21 02 / 49 89-20
E-Mail: service@buehler-technologies.com
Internet: www.buehler-technologies.com

Vermeiden von Veränderung und Beschädigung der einzusendenden Baugruppe

Die Analyse defekter Baugruppen ist ein wesentlicher Bestandteil der Qualitätssicherung der Firma Bühler Technologies GmbH. Um eine aussagekräftige Analyse zu gewährleisten muss die Ware möglichst unverändert untersucht werden. Es dürfen keine Veränderungen oder weitere Beschädigungen auftreten, die Ursachen verdecken oder eine Analyse unmöglich machen.

Umgang mit elektrostatisch sensiblen Baugruppen

Bei elektronischen Baugruppen kann es sich um elektrostatisch sensible Baugruppen handeln. Es ist darauf zu achten, diese Baugruppen ESD-gerecht zu behandeln. Nach Möglichkeit sollten die Baugruppen an einem ESD-gerechten Arbeitsplatz getauscht werden. Ist dies nicht möglich sollten ESD-gerechte Maßnahmen beim Austausch getroffen werden. Der Transport darf nur in ESD-gerechten Behältnissen durchgeführt werden. Die Verpackung der Baugruppen muss ESD-konform sein. Verwenden Sie nach Möglichkeit die Verpackung des Ersatzteils oder wählen Sie selber eine ESD-gerechte Verpackung.

Einbau von Ersatzteilen

Beachten Sie beim Einbau des Ersatzteils die gleichen Vorgaben wie oben beschrieben. Achten Sie auf die ordnungsgemäße Montage des Bauteils und aller Komponenten. Versetzen Sie vor der Inbetriebnahme die Verkabelung wieder in den ursprünglichen Zustand. Fragen Sie im Zweifel beim Hersteller nach weiteren Informationen.

Einsenden von Elektroaltgeräten zur Entsorgung

Wollen Sie ein von Bühler Technologies GmbH stammendes Elektroprodukt zur fachgerechten Entsorgung einsenden, dann tragen Sie bitte in das Feld der RMA-Nr. „WEEE“ ein. Legen Sie dem Altgerät die vollständig ausgefüllte Dekontaminierungserklärung für den Transport von außen sichtbar bei. Weitere Informationen zur Entsorgung von Elektroaltgeräten finden Sie auf der Webseite unseres Unternehmens.

Avoiding alterations and damage to the components to be returned

Analysing defective assemblies is an essential part of quality assurance at Bühler Technologies GmbH. To ensure conclusive analysis the goods must be inspected unaltered, if possible. Modifications or other damages which may hide the cause or render it impossible to analyse are prohibited.

Handling electrostatically conductive components

Electronic assemblies may be sensitive to static electricity. Be sure to handle these assemblies in an ESD-safe manner. Where possible, the assembles should be replaced in an ESD-safe location. If unable to do so, take ESD-safe precautions when replacing these. Must be transported in ESD-safe containers. The packaging of the assemblies must be ESD-safe. If possible, use the packaging of the spare part or use ESD-safe packaging.

Fitting of spare parts

Observe the above specifications when installing the spare part. Ensure the part and all components are properly installed. Return the cables to the original state before putting into service. When in doubt, contact the manufacturer for additional information.

Returning old electrical appliances for disposal

If you wish to return an electrical product from Bühler Technologies GmbH for proper disposal, please enter "WEEE" in the RMA number box. Please attach the fully completed decontamination declaration form for transport to the old appliance so that it is visible from the outside. You can find more information on the disposal of old electrical appliances on our company’s website.

Bühler Technologies GmbH, Harkortstr. 29, D-40880 Ratingen
Tel. +49 (0) 21 02 / 49 89-0, Fax: +49 (0) 21 02 / 49 89-20
E-Mail: service@buehler-technologies.com
Internet: www.buehler-technologies.com